JOSH A. KREVITT (CA SBN 208552)
jkrevitt@gibsondunn.com
H. MARK LYON (CA SBN 162061)
mlyon@gibsondunn.com
GIBSON, DUNN & CRUTCHER LLP
1881 Page Mill Road
Palo Alto, CA 94304-1211
Telephone: (650) 849-5300
Facsimile: (650) 849-5333

WILLIAM F. LEE (pro hac vice)
william.lee@wilmerhale.com
WILMER CUTLER PICKERING
HALE AND DORR LLP
60 State Street
Boston, MA 02109
Telephone: (617) 526-6000
Facsimile: (617) 526-5000

MICHAEL A. JACOBS (CA SBN 111664)
mjacobs@mofo.com
RICHARD S.J. HUNG (CA SBN 197425)
rhung@mofo.com
MORRISON & FOERSTER LLP
425 Market Street
San Francisco, CA 94105-2482
Telephone: (415) 268-7000
Facsimile: (415) 268-7522

MARK D. SELWYN (CA SBN 244180)
mark.selwyn@wilmerhale.com
WILMER CUTLER PICKERING
HALE AND DORR LLP
950 Page Mill Road
Palo Alto, CA 94304
Telephone: (650) 858-6000
Facsimile: (650) 858-6100

Attorneys for Plaintiff and Counterclaim-Defendant Apple Inc.

UNITED STATES DISTRICT COURT
NORTHERN DISTRICT OF CALIFORNIA
SAN JOSE DIVISION

APPLE INC., a California corporation,

Plaintiff,

v.

SAMSUNG ELECTRONICS CO., LTD., a Korean corporation; SAMSUNG ELECTRONICS AMERICA, INC., a New York corporation; and SAMSUNG TELECOMMUNICATIONS AMERICA, LLC, a Delaware limited liability company,

Defendants.

SAMSUNG ELECTRONICS CO., LTD., a Korean corporation; SAMSUNG ELECTRONICS AMERICA, INC., a New York corporation; and SAMSUNG TELECOMMUNICATIONS AMERICA, LLC, a Delaware limited liability company,

Counterclaim-Plaintiffs,

v.

APPLE INC., a California corporation,

Counterclaim-Defendant.

CASE NO. 12-cv-00630-LHK (PSG)

APPLE INC.'S AMENDED OPENING CLAIM CONSTRUCTION BRIEF PURSUANT TO PATENT LOCAL RULE 4-5

Claim Construction Hearing:

Date: February 21, 2013
Time: 10:30 a.m.
Place: Courtroom 1, 5th Floor
Judge: Hon. Lucy H. Koh

TABLE OF CONTENTS

TABLE OF AUTHORITIES

Page(s)

Cases

I. INTRODUCTION

Plaintiff and Counterclaim-Defendant Apple Inc. ("Apple") submits this opening brief regarding the five terms from Apple's asserted patents that Defendants and Counterclaim-Plaintiffs Samsung Electronics Co., Ltd., Samsung Electronics America, Inc., and Samsung Telecommunications America, LLC (collectively, "Samsung") contend require construction by the Court. Samsung identified these five terms from four of the eight asserted Apple patents: U.S. Patent No. 5,666,502 (the "'502 Patent"), U.S. Patent No. 5,946,647 (the "'647 Patent"), U.S. Patent No. 7,761,414 (the "'414 Patent"), and U.S. Patent No. 8,014,760 (the "'760 Patent") (referred to collectively as the "four Apple patents").[1]

II. ARGUMENT

A. Overview

The four Apple patents on which Samsung focuses its claim construction arguments cover technologies Apple developed and incorporated in many of its flagship products, including the iPhone. Samsung's Android-based devices infringe Apple's patents by, among other things, incorporating these claimed technologies to emulate the Apple user experience.[2]

Faced with a clear case of infringement based on just the plain meaning of the terms in these four patents, Samsung follows the predictable path of attempting to rewrite the claims—often simply adding new limitations—to create non-infringement arguments. Each of Samsung's proposed constructions violates bedrock principles of claim construction, and would change the scope and meaning of the claims in which the claim terms appear. Indeed, each of Samsung's proposed constructions is inconsistent with, and in fact precluded by, the patent's claims and specification.

As explained below, the terms Samsung seeks to construe are unambiguous and require no construction at all. Claim construction is not an exercise in substituting different words for clear

---

[1] The four Apple Patents are attached to the Declaration of Jennifer Rho ("Rho Decl.") as Exhibits A through D.

[2] This Court has already found that Apple is likely to succeed in showing that Samsung's Galaxy Nexus device infringes the '647 Patent, along with three other patents at issue in this case – U.S. Patent Nos. 8,046,721; 8,074,172; and 8,086,604. *See* D.I. 221, Order Granting Preliminary Injunction, July 7, 2012 at 42. Despite this finding, Samsung does not now seek construction of any term from those patents other than the one set forth below for the '647 Patent.

claim language, particularly when, as with Samsung's proferred proposals, the constructions would actually change the meaning and scope of the claims. *See U.S. Surgical Corp. v. Ethicon, Inc.*, 103 F.3d 1554, 1568 (Fed. Cir. 1997) (claim construction is appropriate to "clarify and when necessary to explain what the patentee covered by the claims," but is not an "obligatory exercise in redundancy"). If a jury can otherwise understand a claim term in the context of the overall claim language, this Court need not rewrite the claim. *See, e.g.*, *Brown v. 3M*, 265 F.3d 1349, 1352 (Fed. Cir. 2001).

Because the meaning of the five claim terms identified for construction by Samsung is clear, the Court should adopt Apple's approach and give each of the five claim terms its ordinary meaning. In the event that the Court determines a construction is necessary for any of the terms, Apple has proposed a construction that is consistent with the meaning of the term and scope of the claims.

B. The Court Should Adopt Apple's Proposed Approach for Construing the Five Terms Identified by Samsung

As discussed below, the five terms that Samsung contends need construction should be given their plain and ordinary meaning.

1. U.S. Patent No. 5,666,502

a. Background

Apple's '502 Patent, entitled "Graphical User Interface Using Historical Lists with Field Classes," provides solutions to improve the speed and efficiency of data entry into user interface fields. Computer users are frequently presented with electronic interfaces containing various fields in which the user can enter data. Recognizing that it is often the case that the user has previously entered data into a particular field, the '502 Patent describes a data input technique in which the user may select from a list of previously entered data values for a particular field. *See* '502 Patent, Abstract, 2:16-38. As described in the '502 Patent, a "field class" (*e.g.,* "Full Name") is associated with at least one field (*e.g.*, "Name" or "Address") and is indicative of the type of information entered into the field. *See, e.g.*, *id.* Fig. 5A, 10:45-67. In turn, a "history list" may be associated with the field class, and provides a list of frequently or recently entered data values for the field class. *See, e.g.*, *id.* 2:51-60, 2:66-3:1. Using the inventive approach of the '502 Patent, when a user selects a particular field, the computer displays the history list for the field class associated with that field.

See, e.g., *id.* 11:1-7. The user can then simply select an entry in the list, rather than re-type the data into the field. For example, Fig. 5B of the '502 Patent shows the display of a list of names that were frequently or recently entered in response to a user selecting the field labeled "Name."

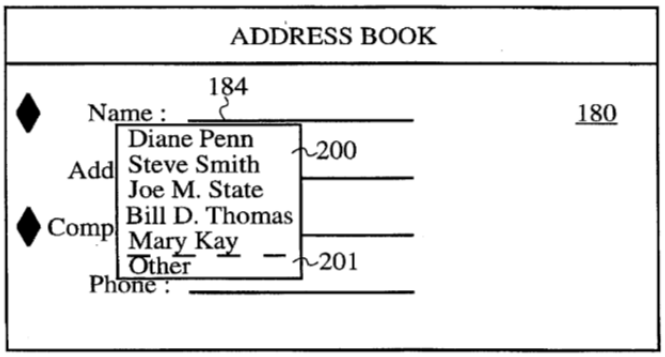

'502 Patent Fig. 5B

In some embodiments, the system maintains a plurality of history lists and selects an appropriate history list to display based on the field class with which the particular field (such as "Name" in the figure above) is associated. In other embodiments, the history list is updated based on a user's selection. As the '502 Patent explains, these improved data entry techniques are particularly useful for small, hand-held computer devices, such as computerized personal organizers and tablets, where input errors during data entry are all too common. *Id.* 1:8-25, 1:63-2:13.

Samsung is asking the Court to construe two terms from the '502 Patent: "history list" and "field class." Both terms appear in independent claims 8, 11, 16, and 26. The term "field class" also appears in independent claim 1. Representative claim 11 recites:

> A method for inputting data into a computer system having a display screen associated therewith, said method comprising:
>
> (a) displaying a form on the display screen of the computer system, the form having at least one field associated with a ***field class*** and requiring data entry by a user;
>
> (b) displaying a ***history list*** associated with the ***field class*** on the display screen on the computer system;
>
> (c) determining whether the user has selected an item from the displayed ***history list***;
>
> (d) assigning a data value for the field to that of a data value associated with the selected item when said determining (c) determines that the user has selected an item; and
>
> (e) updating the ***history list*** in accordance with the selected item when said determining (c) determines that the user has selected an item.

(Emphasis added.)

Samsung's proposed constructions for these disputed terms improperly graft brand new limitations onto the plain claim language. The Court should reject Samsung's revision of the claims.

b. Disputed Term: History List

Claim Term (relevant claims)	Apple's Proposed Construction	Samsung's Proposed Construction
history list (claims 8, 11, 13-17, 20, 22-24, and 26)	No construction necessary. Should the Court find construction necessary: a list of previously used entries	a list of choices based on historical information that is shared between different applications

The term "history list" does not require construction because the clause in which the term appears makes clear that "history list" is a collection of data previously entered with respect to the associated field class from which a user can select a desired input rather than being required to re-enter the data. As stated in the specification, "the history list for each of the field classes is a menu list of most recently and frequently used data values for the field classes." '502 Patent, 2:66-3:1. A jury will have no difficulty in understanding the proper meaning of "history list" simply by reading the claims.

Samsung's proposed construction—that "history list" is "a list of choices based on historical information that is shared between different applications"—is improper for multiple reasons. The first portion of Samsung's proposed construction adds nothing to clarify the term's meaning, but rather merely states the same concept in different words. Changing the simple term "history list" to instead "list of choices based on historical information" does nothing to resolve any ambiguity. As the Federal Circuit emphasized in *U.S. Surgical*, not every claim term need be written simply to provide a definition; in fact, such an "exercise in redundancy" is neither helpful nor required. *U.S. Surgical*, 103 F.3d at 1568. *See also Vivid Techs., Inc. v. Am. Sci. & Eng'g, Inc.*, 200 F.3d 795, 803 (Fed. Cir. 1999) ("Only those terms need be construed that are in controversy, and only to the extent necessary to resolve the controversy.").

The second portion of Samsung's proposed construction adds a completely new limitation that has no support in the intrinsic record. Samsung asserts that the "history list" must be based on

information "that is shared between different applications." That construction would introduce an entirely new concept into the claims, and in a manner inconsistent with the teaching of the specification.

Nothing in the claims even remotely refers to information "shared between different applications." Indeed, the claims do not even recite the concept of applications, let alone different applications. The idea of different applications is simply a new limitation grafted onto the claims by Samsung. The claims focus on the display of a single form with one or more fields and the display of a history list corresponding to the field class associated with the field. The claims do not address whether, and if so how, information might or might not be used by any application, much less "different" applications.

The specification also does not support Samsung's construction. To the contrary, the specification makes it quite clear that any sharing of information between applications is merely an option, *i.e.*, one possible embodiment, not a requirement. In the parties' Joint Claim Construction Statement, Samsung cites passages from the specification stating only that "the historical [information] *can also be shared* between different applications . . . ." '502 Patent, Abstract, 2:38-41, 4:20-25 (emphasis added). The operative word in this passage is "can"—the information used to create history lists *can* be shared between different applications. Thus, while the claims certainly do not preclude such sharing, just as obviously they also do not *require* sharing. Indeed, all of the intrinsic evidence Samsung cites consistently and without exception states that sharing information between applications is only a possibility, not a requirement. Hence, Samsung's construction commits the cardinal sin of importing an example from the specification to limit the claims. *See Specialty Composites v. Cabot Corp., 845 F.2d 981, 987 (Fed. Cir. 1988)* ("Where a specification does not *require* a limitation, that limitation should not be read from the specification into the claims.") (emphasis in original).

In fact, the specification contains embodiments that do *not* have any sharing of information at all between applications. Samsung's construction must be rejected because it would *exclude*, without any basis, these embodiments. For example, Figure 4, a "basic block diagram of list processing 164 associated with a basic embodiment of the invention," describes only a single application. '502

Patent, 9:40-10:32, Figs. 5A-12 and accompanying discussion (no mention of multiple applications). Thus, this embodiment – which is the basic embodiment disclosed – would be precluded by Samsung's construction. Although later examples in the patent describe shared historical information (as illustrated in Figures 13A-B and 14A-C), nothing in the intrinsic record limits the claims to these specific alternative embodiments. *See id.* 16:23-49 (describing historical information shared between a phone messaging program and a fax program), 16:50-17:7 (describing historical information shared among forms in an accounting software package and a greeting program). Samsung's construction, which seeks to limit the patent's claims to these later-disclosed embodiments, would impermissibly exclude at least the "basic embodiment of the invention" illustrated in Figure 4. *Vitronics Corp. v. Conceptronic, Inc.*, 90 F. 3d 1576, 1583 (Fed. Cir. 1996) (a construction that excludes a preferred embodiment "is rarely, if ever, correct.").

Although Apple maintains that "history list" requires no construction, should the Court decide otherwise, Apple submits that a proper construction is "a list of previously used entries." While this construction should be evident from the term "history list" itself, given the claims' context, Apple's alternative construction has intrinsic record support and avoids the vices of importing extraneous limitations from the specification and excluding preferred embodiments. *See, e.g.*, '502 Patent, 2:16-33 ("[T]he present invention is a data input technique for a computer that provides the user with a historical list of potential choices for the data input. . . . The invention . . . provid[es] the historical list of the most recently and/or frequently used data values for the data field that the user is entering data."); *see also* '502 Patent, 10:3-5.

c. Disputed Term: Field Class

Claim Term (relevant claims)	**Apple's Proposed Construction**	**Samsung's Proposed Construction**
field class (claims 1-2, 4-5, 8, 11, 13-17, 20, 22-24 and 26)	No construction necessary. Should the Court find construction necessary: a category of information associated with a field	a data element that identifies a category of information

The term "field class" requires no construction given the language of the '502 Patent claims.

In the patent's claims, the term "field class" describes just that—a class or category of information with which a field is associated. The specification does not provide an alternative or unique definition for that phrase; it simply employs the plain and ordinary meaning. Indeed, the specification and claims state that a field is associated with a field class, which, in turn, is associated with a history list. For example, in describing Figure 5B (shown above), the specification explains:

> Preferably, each history list is associated with a field class. The input fields of a form then designate the field class associated therewith. Here, the field class associated with the field 184 ["Name"] would be "full name". In FIG. 5B, a history list 200 is produced after the user has selected the history list indicator 186 associated with the name label 182 or name field 184 is illustrated. Here, the history list 200 is the history list associated with the field class "full name" and includes five (5) names of persons that were most recently and/or frequently used on the computer system.

Id. 10:63-11:7; Fig. 5B.

As this example demonstrates, the field labeled "Name" is associated with the field class "full name." Thus, whenever the field labeled "Name" is selected by the user, the history list associated with the field class "full name" will be available to the user to select historical entries rather than re-entering data previously entered. *Id.* 2:20-33, 11:1-7. As evident from even a quick read of the claims, this concept is spelled out by the claims themselves, and the jury can simply rely on the "manifest clarity in the claim language alone." *Eastman Kodak Co. v. Goodyear Tire & Rubber Co.*, 114 F.3d 1547, 1554 (Fed. Cir. 1997).

Samsung's construction of "field class," however, injects a completely new and undefined technical term—"data element"—found *nowhere* in the intrinsic record. According to Samsung, the field class is not simply a category of information associated with a field; rather it is "*a data element* that identifies a category of information." The term "data element" does not appear in any claim in the '502 Patent. Nor does the term "data element" appear anywhere in the specification, or anywhere else in the intrinsic record. The term "data element" does not even appear in the numerous dictionary definitions of "class" Samsung cites as extrinsic evidence.[3]

[3] *See, e.g.*, Sippl & Sippl, COMPUTER DICTIONARY AND HANDBOOK (3d ed. 1981) (defining "class" as "[a] set of individuals, documents, data, etc. with similar characteristics"); Sippl & Mayer, THE ESSENTIAL COMPUTER DICTIONARY AND SPELLER (1980) (defining "class" as "[a] group, often a subdivision of a category"); STANDARD DICTIONARY OF COMPUTERS AND INFORMATION PROCESSING (1969) (defining "class" as "[a] set of items, such as persons, documents, data, or articles, that have

Indeed, despite Apple's request during the meet-and-confer process, Samsung has never explained where the term "data element" comes from, what it means, why it should be added to the '502 Patent claims, or how it would help the jury. Samsung's proposed construction merely introduces ambiguity by using a new term ("data element") that itself would require definition.

The purpose of claim construction is to reduce confusion and ambiguity for the jury. *See U.S. Surgical*, 103 F.3d at 1568 (claim construction is appropriate to "clarify and when necessary to explain what the patentee covered by the claims"). Samsung's use of "data element" in its proposed construction does the opposite. Because Samsung's construction has no support in the intrinsic or extrinsic record, "field class" should simply be given its plain and ordinary meaning as Apple has proposed. However, should the Court decide that the term requires further construction, "field class" should merely be construed as "a category of information associated with a field." This construction is consistent with the intrinsic usage of the term described above as well as the extrinsic evidence Samsung submits.

2. U.S. Patent No. 5,946,647

a. Background

Apple's '647 Patent, entitled "System and Method for Performing an Action on a Structure in Computer-Generated Data," is directed to a system for facilitating user interaction with computer data. The Court addressed the '647 Patent in connection with Apple's motion for a preliminary injunction. As this Court recognized in its Preliminary Injunction Order, the '647 Patent is directed to the detection of "structures" in computer data, such as e-mail addresses and telephone numbers, and linking useful actions to those detected structures. D.I. 233, at 30 (citing '647 Patent, 1:8-16).

Computing devices receive data in a variety of formats, and this data often contains information on which the user would like to perform actions. *See* '647 Patent, 1:13-23. For example, the data may contain a phone number that the user would like to call, or an e-mail address to which the user would like to send an e-mail. *See id.* Prior to the '647 Patent invention, once the user had identified a useful structure, such as a phone number, the user then had to copy and paste this

---

some characteristic or set of characteristics in common"). None of these definitions uses the ambiguous term "data element."

information into another field or application in order to use the information. *See id*. 1:24-48.10.

The invention described in the '647 Patent solved this problem by providing users with a system that identifies structures in computer data and enables users to select useful actions linked to those structures. *See id*. 2:4-10. For example, the exemplary system shown in Figure 6, below, has detected several structures including a phone number and an e-mail address. *Id.* 5:29-37. If the user selects the phone number as shown in Figure 7, the system presents a menu of candidate actions that can be performed on the detected phone number, such as "Call" or "Put in electronic telephone book." *Id.* 5:38-43. Once the user selects one of the candidate actions, the system performs the selected action on the detected structure. In this example, the system opens the electronic telephone book and places the telephone number in the appropriate field. *Id.* 5:44-50.

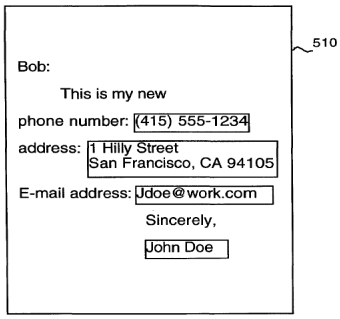

'647 Patent Figure 6

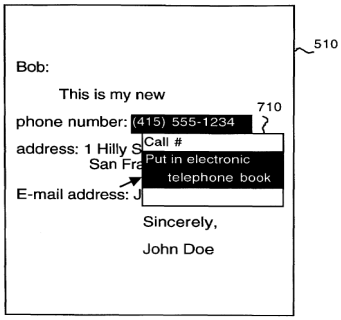

'647 Patent Figure 7

The sole term for which Samsung seeks construction in the claims asserted from the '647 Patent is "action processor." Claim 1, shown below, is an illustrative example. The claim recites a "computer-based system for detecting structures in data and performing actions on detected structures." These functions are performed by "program routines," including (1) an analyzer server that detects structures in data and links actions to the detected structure, (2) a user interface that enables the user to select a detected structure and a linked action, and (3) an "action processor" that performs the selected action on the detected structure:

> A computer-based system for detecting structures in data and performing actions on detected structures, comprising:
>
> an input device for receiving data;
>
> an output device for presenting the data;

a memory storing information including program routines including

an analyzer server for detecting structures in the data, and for linking actions to the detected structures;

a user interface enabling the selection of a detected structure and a linked action; and

an ***action processor*** for performing the selected action linked to the selected structure; and

a processing unit coupled to the input device, the output device, and the memory for controlling the execution of the program routines.

(Emphasis added.)

Thus, according to the express claim language, the "action processor" is simply the set of "program routines" stored in memory that "perform[] the selected action linked to the selected structure."

As explained below, this term does not require construction. In fact, Samsung did not seek to have this term construed during the preliminary injunction proceedings. Nor has this term ever been raised by any other party in any of the other proceedings involving the '647 Patent (all involving the same law firm currently representing Samsung).

b. Disputed Term: Action Processor

Claim Term (relevant claims)	**Apple's Proposed Construction**	**Samsung's Proposed Construction**
action processor (claims 1, 2, 4, 6, 8 and 9)	No construction necessary. Should the Court find construction necessary: program routine(s) that perform the selected action on the detected structure	a program routine separate from a client that performs the selected action on the detected structure

The meaning of "action processor" is clear from the context of the claims. The patent's straightforward claim language also matches exactly the specification's description of the action processor. For example, the Summary of the Invention explains that "[w]hen a candidate action is selected, the action processor performs the selected action on the selected structure." '647 Patent, 2:51-53, Abstract ("Upon selection of an action, the action processor performs the action on the

detected structure."), *id*. 4:52-57 ("Upon selection of a candidate action, user interface 240 transmits the selected structure and the selected action to action processor 250. Action processor 250 retrieves the sequence of operations that constitute the selected action, and performs the sequence using the selected structure as the object of the selected action."). This term does not need any further construction.

Samsung seeks to redefine "action processor" by improperly adding to the claims new language found *nowhere* in the intrinsic record – not in the claims, not in the specification, not in the prosecution history. Samsung and Apple agree that the action processor "performs the selected action on the detected structure."[4] But Samsung attempts to inject extra language into the claims resulting in two new limitations. First, Samsung introduces an undefined technical term—"client"—not found anywhere in the claims. In fact, the term "client" does not even appear in the specification or the file history. Second, Samsung's construction requires that the action processor be "separate" from this new, undefined "client."

Nothing in the patent requires or even suggests either of these new limitations. In an effort to overcome the lack of intrinsic support, Samsung cites to an embodiment in the patent that mentions an "application." But Samsung provides absolutely no support for equating the "application" of this embodiment with the term "client" that Samsung has injected into its construction.

Nor does this embodiment support Samsung's construction, and certainly cannot be used to limit the claims in any event. In the example cited by Samsung, depicted in Figure 1 below:

[4] To the extent that Samsung's construction limits the "action processor" to a single, discrete program routine, this limitation should also be rejected. As this Court previously noted, "the inventors of the '647 Patent had a broad conception of the word 'routine,'" and nothing in the intrinsic record supports the idea that "the patent requires a *single* routine" that performs the claimed functions. D.I. 221, at 33 (emphasis in original).

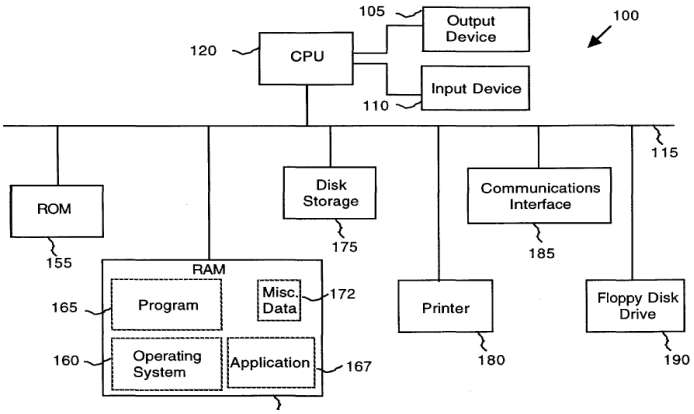

'674 Patent Fig. 1

> Application 167 is a program, such as a word-processor or e-mail program, that presents data on output device 105 to a user. The program 165 of the present invention is stored in RAM 170 and causes CPU 120 to identify structures in the data presented by application 167, to associate actions with the structures identified in the data, to enable the user to select a structure and an action, and to automatically perform the selected action on the identified structure.

Id. 3:36-44.

"Program 165" in this example "contains program routines including an analyzer server 220, an application program interface 230, a user interface 240, and an action processor 250." *Id.* 3:54-57; *see also* Fig. 2. Samsung appears to believe that because program 165 of Figure 1, above (which includes routines for an action processor 250) is shown as a separate box from application 167, the action processor must therefore be "separate from a client." In other words, Samsung appears to base its argument on two premises: (1) the embodiment's "application" is a "client" (a new, undefined term); and (2) the client must be "separate" from the action processor based on the arrangement of blocks in a figure depicting an embodiment.

Both premises are false. The patent provides no basis for equating the word "application" with the word "client." The latter word does not even exist in the intrinsic record. That alone should end the inquiry. Even if this "client" did exist, however, and even if it were depicted in a different box than the action processor in the figure, that would still not provide any basis for limiting the *claims* in the manner Samsung suggests. The law is clear that claims are not to be limited to embodiments absent "words or expressions of manifest exclusion or restriction"; the claims are especially not limited to figures depicting those embodiments. *See, e.g.*, *Liebel-Flarsheim Co. v. Medrad, Inc.*, 358 F.3d 898, 906 (Fed. Cir. 2004) ("Even when the specification describes only a

single embodiment, the claims of the patent will not be read restrictively unless the patentee has demonstrated a clear intention to limit the claim scope using words or expressions of manifest exclusion or restriction.") (quotation omitted); *Gart v. Logitech, Inc.*, 254 F.3d 1334, 1342 (Fed. Cir. 2001) (noting that "drawings [depicting the preferred embodiment] are not meant to represent 'the' invention or to limit the scope of coverage defined by the words used in the claims themselves").

Samsung cannot cite to any "words or expressions of manifest exclusion or restriction" limiting the claims so that the action processor is "separate from a client." In fact, the intrinsic record contains *no words at all* supporting Samsung's new limitations. "[T]he language that [Samsung] argues should limit claim 1 is clearly found in the ['647] patent's description of the preferred embodiment. *It is precisely against this type of claim construction that our prior case law counsels*." *Comark Communs. v. Harris Corp.*, 156 F.3d 1182, 1187 (Fed. Cir. 1998) (emphasis added).

The '647 Patent's file history is equally devoid of support for Samsung's new limitations. Samsung cites a January 28, 1998 Office Action (Rho Decl. Exh. E) and subsequent response, in which the patentee overcame a rejection based on U.S. Patent No. 5,574,843 (the "'843 Patent"). In responding to the rejection, the patentee explained that the "structures" discussed in the '843 Patent are computer "data structures" (*i.e.*, computer code), whereas the '647 Patent's "structures" (*e.g.*, instances of phone numbers, e-mail addresses, etc.) are fundamentally different. Rho Decl. Exh. F (Apr. 28, 1998 Remarks), at 2-3. The patentee also explained that the '843 Patent's "data structures" are generated *internally* to the system, rather than a part of information that is generated *externally*. *Id.* at 3. As a result, the '843 Patent does not disclose an "action processor" because it does not disclose "selecting a pre-existing structure detected from within externally generated data." *Id.* at 4.

Nothing in the cited portions of the prosecution history requires that the claimed data be received from a "client" (however "client" might be defined) that is "separate" from the action processor. Moreover, nothing cited by Samsung in either the prosecution history or the specification remotely approaches a "clear and unmistakable disavowal" of claim 1's broad scope. *Omega Eng'g., Inc. v. Raytek Corp.*, 334 F.3d 1314, 1324 (Fed. Cir. 2003) (statements disclaiming a term's scope must be "both so clear as to show reasonable clarity and deliberateness, . . . and so unmistakable as to

be unambiguous evidence of disclaimer") (citations omitted).[5]

The preliminary injunction phase of this case foreshadowed the danger of Samsung's construction. There, the parties offered competing expert opinions of whether the "analyzer server" (a different term) in the accused products was sufficiently "separate" from a "client." This Court rejected Samsung's strict interpretation of "separate," finding that "there may be code intertwined" between the client and analyzer server. D.I. 221, at 34. Samsung now wants to rehash these same disputes—and make the same erroneous non-infringement arguments—for the "action processor." The inevitable disagreements over what constitutes the "client" and if it is sufficiently "separate" from the action processor—questions the patent never even contemplates—demonstrate that Samsung's construction serves only to confuse and complicate the claim's plain language.

As a result of the clear context of the claim, Apple instead contends that "action processor" requires no construction. However, should the Court decide that some construction of the term would be helpful for the jury, Apple suggests that the term should be construed simply as "program routine(s) that perform the selected action on the detected structure." As discussed above, this construction is consistent with the claim language and specification, and, unlike Samsung's proposed construction, adds no extraneous limitations unsupported by the intrinsic evidence.

3. U.S. Patent No. 7,761,414

a. Background

The '414 Patent, entitled "Asynchronous Data Synchronization Amongst Devices," describes synchronizing data stored on two different computing devices. Synchronization is the process of comparing two or more data sources and then updating the sources to ensure that all have the same

[5] Samsung also cites a chart submitted in the '647 Patent reexamination proceedings discussing the invention's reduction to practice as part of a program called "LiveDoc," an "implementation of the invention." *See* Rho Decl. Exh. G (Feb. 10, 2011 Decl. of Chi Hsin, Exh. A-1). Nothing in this exhibit describes an action processor "separate from a client," nor could such an implementation limit the claim's scope. *Abbott GmbH & Co., KG v. Centocor Ortho Biotech, Inc.*, 2012 U.S. Dist. LEXIS 31601, at *108 (D. Mass. Mar. 9, 2012) (priority for a broad claim can be established by reducing to practice a particular embodiment within the broader claim) (citing *In re Jolley*, 308 F.3d 1317, 1322 (Fed. Cir. 2002)).

set of data. For example, a mobile phone may have an address book with contacts where the user adds phone numbers to the address book directly from the phone. That same user may also have a computer with another address book and may occasionally add phone numbers to the address book on the computer. Synchronization will reconcile those two potential disparate phone books and provide a uniform set of data on both the phone and computer.

The '414 Patent provides an important improvement over prior art synchronization systems. In many prior systems, users could not access and modify their data while it was in the process of being synchronized, but instead would need to wait for the synchronization process to complete. That impediment, which could frustrate the user experience, was rooted in certain fundamental characteristics of computers and the way they handle processing multiple programs. A computer program is, at its essence, a series of instructions for a processor to execute. Each program or process employs one or more "threads," which is a series of steps that a computer process needs to complete.[6] Some systems are capable of employing one thread to allow a user to edit a phone number on a phone while another thread provides synchronization. In that situation, before the invention of the '414 Patent, data corruption could occur if, for example, the synchronization component had already compared the phone number entry on the device with the entry on the user's computer before the user changed the number, and then wrote stale data to both phone books. Rather than risk data corruption, those past systems would stop the data modification thread from running by, for instance, locking the screen of the device while the synchronization thread was running and only unlocking it when synchronization was complete.

The '414 Patent overcomes problems with data corruption, but still allows a user to access data while synchronization is occurring. The patent provides, a data processing system that executes

[6] Rho Decl. Exh. H, THE IEEE STANDARD DICTIONARY OF ELECTRICAL AND ELECTRONICS TERMS (6th ed. 1996) at 1108 (defining a thread as "a single flow of control in a process" or program). In a multi-threaded computer system, multiple threads (either in two programs or within the same program) can be active at once. For example, a computer system might be operating one thread for the web browser and a second thread for a word processing program, both of which are running on the computer at the same time. Or, a single program may have multiple threads. An example of a single program with two threads is a video game where one thread may control the graphics on the screen while another keeps score.

both a synchronization processing thread and a non-synchronization processing thread *concurrently*. *See* '414 Patent, Abstract, 2:18-20, 24:42-47. The '414 Patent explains that these multiple threads "allow[] a user of a device to operate the device while it is being synchronized, and similarly allows a user of the host to operate the host while the host is synchronizing with the device." *Id.* 24:49-51. The patent specification provides an example of this functionality:

> [A] user on the device may be viewing a calendar program which displays a calendar of the user showing events and possibly To Do items for the user while at the same time a synchronization service is synchronizing the calendar data on the device with calendar data on the host.

Id. 24:53-57.

The sole term that Samsung asks this Court to construe from the '414 Patent is "concurrently with." The term "concurrently with" appears in each of the independent claims of the '414 Patent (claims 1, 11, 21, 23, 27, and 31). For example, claim 1 recites:

> A machine implemented method comprising:
>
> executing at least one user-level non-synchronization processing thread, wherein the at least one user-level non-synchronization processing thread is provided by a user application which provides a user interface to allow a user to access and edit structured data in a first store associated with a first database; and
>
> executing at least one synchronization processing thread ***concurrently with*** the executing of the at least one user-level non-synchronization processing thread, wherein the at least one synchronization processing thread is provided by a synchronization software component which is configured to synchronize the structured data from the first database with the structured data from a second database.

(Emphasis added.)

b. Disputed Term: Concurrently With

Claim Term (relevant claims)	Apple's Proposed Construction	Samsung's Proposed Construction
concurrently with (claims 1, 2, 4, 6, 7, 10-12, 14, 16-17, 20-24, 26-28, 30-32)	No construction necessary. Should the court find construction necessary, this term should be construed as: The synchronization thread and the non-synchronization thread are both active during an overlapping time interval	At the same time as

The meaning of the term "concurrently with" in the context of claims of the '414 Patent is

unambiguous and requires no construction. Samsung demonstrates that fact with its own construction, which does nothing more than merely replace the words "concurrently with" with the phrase "at the same time as." That construction does not provide any further definition or clarity to the claim and should not resolve a single disputed issue of infringement or validity in this case. Indeed, during the meet-and-confer process, Apple asked Samsung to explain what about the phrase "concurrently with" was ambiguous, how Samsung's construction resolved that ambiguity, or otherwise explain the purpose of the construction. Samsung refused to do so. For that reason alone, Samsung's construction should be rejected. Claim construction is appropriate to "clarify and when necessary to explain what the patentee covered by the claims," but is not an "obligatory exercise in redundancy." *U.S. Surgical*, 103 F.3d at 1568; *Eastman Kodak*, 114 F.3d at 1554. Here, no construction is necessary or appropriate.

The only conceivable purpose of Samsung's construction is to insert into the patent a requirement that is contrary to both the language of the claims and to the fundamental teaching of the patent. Specifically, it appears that Samsung may argue that its construction requires that each portion of each thread run in parallel at exactly the same time. As explained below, a single processor can only execute a single instruction at a time. A single processor runs multiple threads concurrently (as the claims recite) even though it is only executing a single instruction from a single thread at any one time. As single processor executes multiple threads concurrently by, for example, rapidly alternating in between the instructions in each thread (the common understanding of concurrency in the art). Thus, to have two threads (which are just a series of computer instructions) executing at exactly the same time (and not, for example, interleaving or alternating between threads) would require two or more physical processors. The patent, however, discloses the use of a single processor. As a result, if the purpose of Samsung's construction is to require that instructions from the threads be executed at exactly the same time – thus requiring multiple processors – the construction is inconsistent with the plain meaning of "concurrently," it would exclude the single-processor embodiments explicitly disclosed in the specification, and it would fundamentally alter the scope of the claims. If that is indeed the purpose of Samsung's construction, it must be rejected.

Any construction that would require that the threads execute at exactly the same time and

thereby exclude execution of two threads on a single processor would be wholly contrary to the language of the claims, particularly the term "concurrently with," as understood by those skilled in the art. In the field of computer science, when *one* processor executes multiple threads by rapidly switching between them it is executing those threads "concurrently." For example, one dictionary defines "concurrent execution" as "[t]he simultaneous execution of multiple computer operations by the CPU," and goes on to explain the operations being executed concurrently are not actually being executed at exactly the same time: "Since microprocessors can work so quickly, it seems simultaneous even though each operation is usually executed in sequence." Rho Decl. Exh. I, Kaplan, *Wiley Electrical and Electronics Dictionary* (2004) at 138. Other commentators similarly note that "[w]hile strictly speaking, at any instant of time, the [processor] is running only one program, in the course of 1 second it may work on several programs, thus giving the users the illusion of parallelism." Rho Decl. Exh. J, Tanenbaum, *Modern Operating Systems* (1992) at 27. Thus, concurrent execution of the threads can be achieved either "by interleaving the activities" on one processor in a single processor system or "by simultaneous execution" when more than one processor is available. Rho Decl. Exh. K, *The IEEE Standard Dictionary of Electrical and Electronics Terms* (6th ed. 1996) at 196-7.

A construction excluding the execution of two threads on a single processor also is contrary to the express teaching of the specification. The '414 Patent states "[t]he processing system 47 may include ***one or more*** microprocessors, such as a microprocessor from Intel or IBM." '414 Patent, 5:23-24 (emphasis added). The '414 Patent specification further describes the embodiment of the invention that:

> [I]nvolves the ability for one or both of the device and the host to have both non-synchronization processes and synchronization processes occurring concurrently ***in that they are both being executed by one or more processing systems***. Both sets of processes or threads may be in different address spaces. This allows a user of a device to operate the device while it is being synchronized, and similarly allows a user of the host to operate the host while the host is synchronizing with the device. For example, if both the device and the host have these capabilities, then a user on the device may be viewing a calendar program which displays a calendar of the user showing events and possibly To Do items for the user while at the same time a synchronization service is synchronizing the calendar data on the device with calendar data on the host.

Id. 24:43-47 (emphasis added). In this disclosed embodiment of the claimed invention, a user is able

to operate a device while it is synchronizing in either a single- or multi-processor environment. Thus, a construction requiring multiple processors would improperly exclude embodiments in the patent. *See Vitronics*, 90 F.3d at 1583 (construction excluding a preferred embodiment "is rarely, if ever, correct.").

Although Apple maintains that "concurrently with" requires no construction, should the Court decide otherwise, this term should be construed in the context of the claims and specification. Apple suggests that an appropriate definition of the term "concurrently with" would be: "the synchronization thread and the non-synchronization thread are both active during an overlapping time interval." While this construction is self-evident from the claims' context, the construction also has both the virtue of intrinsic support and avoids adding an unsupported limitation and excluding preferred embodiments. Since the disclosed embodiment of the '414 Patent allows for a single processor system to execute two threads concurrently, those threads are both active during an overlapping time interval, but no two instructions from each of those threads are required to execute at the *exact* same time on separate processors, as Samsung may argue. *See, e.g.*, '414 Patent, 24:42-47 ("[I]nvolves the ability for one or both of the device and the host to have both non-synchronization processes and synchronization processes occurring concurrently *in that they are both being executed by one or more processing systems.*") (emphasis added).

4. U.S. Patent No. 8,014,760

a. Background

The '760 Patent, entitled "Missed Telephone Call Management for a Portable Multifunction Device," describes and claims methods and systems that enable smartphone users to contact a missed caller easily and quickly by phone, e-mail, instant message, or other method of communication with just a few simple gestures on a touchscreen. The '760 Patent describes a computing device, such as a smartphone, that displays a list of missed telephone calls, with each missed call on the list having two interactive display portions. When the user selects the first interactive display portion, the device initiates a return phone call to the missed caller. If, instead, the user selects the second interactive display portion, the device displays contact information for the missed caller and allows the user to contact the caller non-telephonically, such as by e-mail or instant message.

For example, when a user wishes to return a call to Bruce Walker, listed in Figure 12B below, the user selects the green highlighted interactive portion of the name Bruce Walker on the list; the device then initiates a telephone call to Bruce Walker. Alternatively, if the user selects the interactive display portion highlighted in orange on the Bruce Walker entry, a new display (highlighted in blue in Figure 12C below right) is completely substituted for the original display (highlighted in blue) shown in Figure 12B below. The new display includes Bruce Walker's contact information and at least one object associated with the contact information that the user can select to initiate a non-telephonic communication. Thus, in the figures below, if the user selects the bubble that includes Bruce Walker's work e-mail in element 2820, an e-mail application is opened with Bruce Walker's work e-mail address included in the recipient field. '760 Patent, 31:23-31.

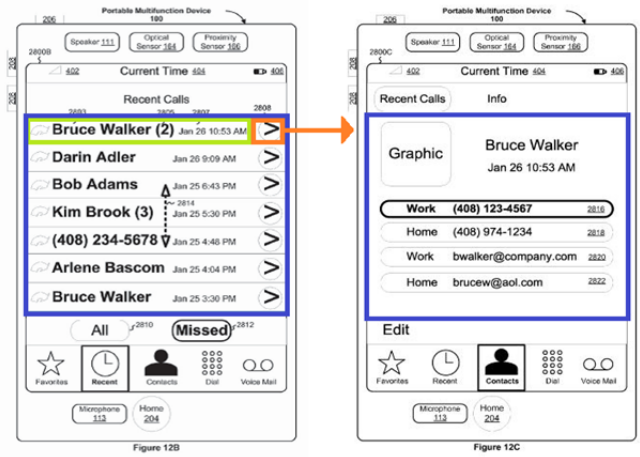

'760 Patent Figs. 12B and 12C

Samsung now seeks construction of the phrase "completely substitut[e/ing] display of the list [of interactive items] with display of contact information" from the '760 Patent. The disputed phrase appears in all independent claims of the '760 Patent, as exemplified by claim 1, which reads in pertinent part:

> displaying a list of interactive items comprising missed telephone calls, wherein each item in the list of interactive items includes a first interactive displayed portion and a second interactive displayed portion distinct from the first interactive displayed portion;
>
> immediately in response to detecting a finger gesture on the first interactive displayed portion of a respective user selected item in the list, initiating a return telephone call to a return telephone number associated with the respective user selected item;

> immediately in response to detecting a finger gesture on the second interactive displayed portion of the respective user selected item, ***completely substituting display of the list of interactive items with display of contact information for a respective caller corresponding to the respective user selected item***, the displayed contact information including a plurality of contact objects;

(Emphasis added.)

b. Disputed Term: Completely Substitut[e/ing] Display of the List [of Interactive Items] with Display of Contact Information

Claim Term (relevant claims)	Apple's Proposed Construction	Samsung's Proposed Construction
Completely substitut[e/ing] display of the list [of interactive items] with display of contact information (claims 1, 8, 10, 12, 14, 16, 18, 19, 21)	No construction necessary. Should the Court find construction necessary, this term should be construed as: Replac[e/ing] the display of the list of interactive items with the display of information for a selected contact.	Display[ing] numbers, addresses, and/or instant messaging usernames for contacting a caller such that none of the list of missed calls is visible.

Once again, Samsung seeks to construe a phrase that is straightforward, non-technical, and requires no construction. The claim language means what it says: In response to detecting a gesture on the second interactive displayed portion, the "display of the list of interactive items comprising missed telephone calls" is completely substituted, or replaced, "with display of contact information for a respective caller." *See, e.g.*, '760 Patent, claim 1.[7]

Samsung's proposed construction should be rejected for two reasons. First, Samsung's phrase "such that none of the list of missed calls is visible" at best does nothing more than restate, in an unhelpful and more ambiguous way, the requirement of "completely substituting display of the list" with the display of contact information. To the extent this phrase is meant to impose any further requirement, it is contrary to the language of the claims, the clear disclosure of the specification, and the file history. Second, Samsung's attempt to restrict "contact information" to only certain specific types of contact information is not an attempt to construe claim language at all, but rather an attempt

[7] *See, e.g.*, Rho Decl. Exh. L (Merriam-Webster defines the word "substitute" as "to take the place of: replace."). Similarly, the American Heritage Dictionary defines it as "to put or use (a person or thing) in place of another." Rho Decl. Exh. M. By its own language, the '760 Patent claim requires a concept of replacing one display with another

to narrow the claim in a manner unsupported by anything in the intrinsic record.

(i) "Completely substituting . . ."

The sole purpose of the entire "completely substituting . . ." limitation is to clarify that the list of interactive items must be entirely replaced by display of information of a selected contact. The PTO examiner required this language for the purpose of distinguishing the Chew prior art reference on precisely that basis. In the Chew system, the second display only *partially* rather than *completely* obscured the first display, such as disclosed in Figure 5 of the reference below:

Chew reference Fig. 5

The examiner's amendment makes clear that the added "completely substituting" language refers to entirely replacing one display image for another display image. To the extent that is all that is required by Samsung's construction, there is no need for it because the claim language is perfectly clear on this point.

However, to the extent that Samsung's construction would require more than complete replacement of the list, it should be rejected. When Apple asked Samsung to explain what about the phrase "completely substituting" was unclear, and whether Samsung's construction was meant to add any further requirement to the claim, Samsung flatly refused to respond. It appears that Samsung may intend for its construction to not only require *complete substitution* of the list of missed calls, but to further require that *no information* from that list be included in the display of contact information. Such an interpretation would be wholly inconsistent with the entirety of the intrinsic record.

Indeed, if interpreted to preclude any information overlap between the two displays, Samsung's construction would be contrary to the plain language of the claims. Nothing in the claims even remotely suggests that the display of contact information cannot include information that is not

also displayed in the list of interactive items. The claims address the concept of "substituting" *displays*, not the concept of substituting *information in* the displays. As previously mentioned, the PTO Examiner added the "completely substituting" limitation during prosecution to distinguish the Chew prior art reference, which disclosed displaying contact information for a selected entry in a sub-menu that only *partially covered* the original display (of interactive items). *See* Rho Decl. Exh. N, June 1, 2011 Notice of Allowance. Clearly, that limitation was not added to define or limit the *content* of the display of contact information in any way.

Samsung's construction would also be contrary to the teaching of the specification, as it would exclude expressly disclosed preferred embodiments. For instance, Figure 12C of the '760 Patent below illustrates a second display that presents information that is also included on the list of missed calls from the first display. Indeed, Figure 12C shows the most recent missed call from Bruce Walker, made at 10:53 a.m. on January 26 (highlighted in blue below); this date and time information also appears in Figure 12B (also highlighted in blue). Such information appears along with Bruce Walker's "numbers, addresses, and/or instant messaging usernames" and other contact information whose display was "completely" substituted for the list of missed calls on the first display. '760 Patent at Fig. 12C, 31:4-7.

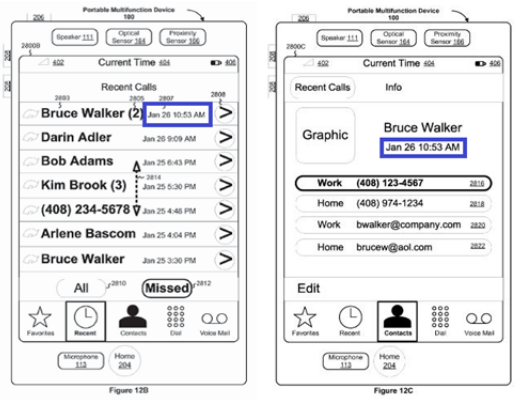

'760 Patent Figs. 12B and 12C

Because the date and time information from the missed call list appears along with Bruce Walker's "numbers, addresses, and/or instant messaging usernames" and other contact information on the second display, the patent's "completely substituting" limitation cannot be read to require that no information from the list is replicated in the display of contact information. *See Vitronics*, 90 F.3d

at 1583 ("A claim construction that excludes a preferred embodiment . . . is rarely, if ever, correct.").

(ii) "Contact information . . ."

Samsung's construction also improperly limits the phrase "contact information" to only "numbers, addresses, and/or instant messaging usernames for contacting a caller." Yet, neither the '760 Patent's specification, nor its claims, support narrowing "contact information" to these three types of information. Instead, the '760 Patent specification broadly states that "[p]roviding a plurality of contact objects makes it easy for a user to choose and initiate communications with a missed caller by *any available communication modality*." *See, e.g.*, '760 Patent, 31:41-44 (emphasis added). Indeed, the specification identifies, without limitation, a variety of different types of contact information, including a "telephone number object," an "email contact object," or an "instant messaging object." *See id.* 34:55-59 ("In some embodiments, the second contact object is an email contact object, an instant messaging contact object, or a telephone number object having a secondary telephone number different from the primary telephone number.").

In each case, the specification prefaces the example by stating "in some embodiments," thereby clarifying that the examples are not limiting. And it is well settled that the claims should not be limited to the examples absent a clear disclaimer of scope. *See Specialty Composites*, 845 F.2d 981 at 987 ("Where a specification does not *require* a limitation, that limitation should not be read from the specification into the claims.") (emphasis in original). Furthermore, dependent claims 2 and 3 of the '760 Patent specify that the second object is "an email contact object" or "an instant messaging object." As also explained above, the presence of a dependent claim that adds a particular limitation gives rise to a presumption that the limitation in question is not present in the independent claim. *See Phillips v. AWH Corp.*, 415 F.3d 1303, 1314-15 (Fed. Cir. 2005) (en banc). At bottom, Samsung has not, and cannot, point to any disclaimer within the '760 Patent's intrinsic evidence nor overcome the presumption created by the language of the dependent claims.

Finally, Samsung's proposed construction uses the phrase "for contacting a caller" to modify the phrase "numbers, addresses, and/or instant messaging usernames." As a result, Samsung's construction could be interpreted to require that the displayed numbers, addresses or instant messaging usernames *all* be objects that can be selected to immediately initiate contact with the

caller. By contrast, the claims, such as exemplary claim 1, only require that there be a plurality of such objects, one of which is a telephone number object and a second of which is associated with a non-telephonic communication modality. Nothing in the claims, the specification, or the file history of the '760 Patent precludes some of the displayed information from being just informational, instead of selectable objects that initiate contact. For this additional reason, Samsung's proposed construction should be rejected as introducing ambiguity, rather than removing it. *See Tessenderlo Kerley, Inc. v. O-Cal, Inc.*, No. C 11-04100 WHA, 2012 WL 3276981 (N.D. Cal. Aug. 9, 2012) (rejecting defendants' construction because "[a] purpose of claim construction is to remove ambiguity. Here, construing the term [as proposed by defendants] would add ambiguity . . . .").

In sum, Apple believes the disputed term, "completely substitut[e/ing] display of the list [of interactive items] with display of contact information," is clear and requires no construction. However, in the event the Court is inclined to provide the jury with a construction, Apple proposes the following: "replac[e/ing] the display of the list of interactive items with the display of information for a selected contact." This construction makes clear that the "completely substituting" language refers to the replacement of a display rather than of all the information previously displayed, and it is thus consistent with the plain meaning of the term, with the PTO examiner's amendment, and indeed with the most natural reading of Samsung's own proposed construction. It also, unlike Samsung's proposed construction, does not add unsupported limitations for the content of the contact information.

III. CONCLUSION

For the foregoing reasons, Apple requests that the Court adopt its proposed constructions and reject Samsung's unsupported definitions.

GIBSON, DUNN & CRUTCHER LLP

Dated: February 7, 2013

By: */s/ H. Mark Lyon*

Attorneys for Plaintiff and Counterclaim-Defendant Apple Inc.

CERTIFICATE OF SERVICE

The undersigned hereby certifies that the foregoing document, and all supporting documents and exhibits, was filed electronically in compliance with Civil Local Rule 5, and will be served on all counsel for Samsung Electronics Co., Ltd., Samsung Electronics America, Inc., and Samsung Telecommunications America, LLC who have consented to electronic service in accordance with the Northern District of California Local Rules via the Court's ECF system.

Dated: February 7, 2013

By: *\/s/ H. Mark Lyon*
H. Mark Lyon