IN THE UNITED STATES PATENT AND TRADEMARK OFFICE

Request For *Inter Partes* Reexamination Of:

U.S. Patent No. 7,620,565

Inventor: Daniel H. Abelow

Assignee: Lodsys, LLC

Filed: August 25, 2006

Issued: November 17, 2009

For: Customer-Based Product Design Module

REQUEST FOR *INTER PARTES* REEXAMINATION OF U.S. PATENT NO. 7,620,565 UNDER 35 U.S.C. § 311-318 AND 37 C.F.R. §§ 1.913, 1.915

ATTACHMENT TO FORM 1465

Mail Stop *Inter Partes* Reexamination
Attn: Central Reexamination Unit
Commissioner for Patents
P.O. Box 1450
Alexandria, VA 22313-1450

REQUEST FOR *INTER PARTES* REEXAMINATION OF U.S. PATENT NO. 7,620,565

TABLE OF CONTENTS

TABLE OF EXHIBITS

LIST OF EXHIBITS

The Exhibits to the present Request are arranged in four groups: prior art ("PA"), relevant patent prosecution file history (including patents) ("PAT"), claim charts ("CC"), and other documents ("OTH").

Prior Art

PA-SB08	USPTO Form SB08
PA-A	U.S. Patent No. 5,003,384 ("Durden," attachment AA to Form SB08)
PA-B	U.S. Patent No. 5,077,582 ("Kravette," attachment BA to Form SB08)
PA-C	U.S. Patent No. 5,083,271 ("Thacher," attachment CA to Form SB08)
PA-D	U.S. Patent No. 5,956,505 ("Manduley," attachment DA to Form SB08)
PA-E	U.S. Patent No. 5,291,416 ("Hutchins," attachment EA to Form SB08)

Relevant Patent Materials (PAT)

PAT-A	U.S. Patent No. 7,620,565 ("'565 patent")
PAT-B	Terminal Disclaimer for U.S. Patent No. 7,620,565
PAT-C	File Wrapper for U.S. Patent No. 7,620,565 ("'565 Pros. Hist.")

Claim Charts (CC)

CC-A	Claim Chart for Durden invalidating Claims 1-6, 8-11, 13-15, 17-19, 21, 22, and 25-32 under 35 U.S.C. § 102(b)
CC-B	Claim Chart for Kravette invalidating Claims 1-6, 8-11, 13-15, 17-19, 21, 22, and 25-32 under 35 U.S.C. § 102(e)
CC-C	Claim Chart for Thacher invalidating Claims 1-6, 8-11, 13-15, 17-19, 21, 22, and 25-32 under 35 U.S.C. § 102(e)
CC-D	Claim Chart for Manduley invalidating Claims 1-6, 8-11, 13-15, 17-19, 21, 22, and 25-32 under 35 U.S.C. § 102(e)

CC-E	Claim Chart for Hutchins invalidating Claims 1, 2, 5-10, 14, 15, 17-22, and 26-32 under 35 U.S.C. § 102(e)

Other Documents (OTH)

OTH-A	Lodsys LLC v. Brother Int'l Corp. et al., Case No. 2:11-cv-00009, in the U.S. District Court for the Eastern District of Texas
OTH-B	Lodsys LLC v. Combay Inc. et al., Case No. 2:11-cv-00272, in the U.S. District Court for the Eastern District of Texas
OTH-C	Lodsys LLC v. Adidas America Inc. et al., Case No. 2:11-cv-00283, in the U.S. District Court for the Eastern District of Texas
OTH-D	Lodsys LLC v. DriveTime Automotive Group Inc. et al., Case No. 2:11-cv-00309, in the U.S. District Court for the Eastern District of Texas
OTH-E	DriveTime Automotive Group Inc., v. Lodsys LLC, Case No. 2:11-cv-01307, in the U.S. District Court for Arizona
OTH-F	ESET, LLC v. Lodsys LLC, Case No. 3:11-cv-01285, in the U.S. District Court for the Southern District of California
OTH-G	ESET, LLC v. Lodsys LLC, Case No. 2:11-cv-00650, in the U.S. District Court for the Eastern District of Wisconsin
OTH-H	Foresee Results, Inc. v. Lodsys LLC, Case No. 1:11-cv-03886, in the U.S. District Court for the Northern District of Illinois
OTH-I	New York Times Co. v. Lodsys LLC, Case No. 1:11-cv-04004, in the U.S. District Court for the Northern District of Illinois
OTH-J	LivePerson, Inc. v. Lodsys LLC, Case No. 1:11-cv-04088, in the U.S. District Court for the Northern District of Illinois
OTH-K	OpinionLab, Inc. v. Lodsys LLC, Case No. 1:11-cv-04015, in the U.S. District Court for the Northern District of Illinois

REQUEST FOR *INTER PARTES* REEXAMINATION OF U.S. PATENT 7,620,565

Dear Sir:

Pursuant to 35 U.S.C. §§ 311 *et seq.* and 37 C.F.R. §§ 1.902 *et seq.*, Google Inc. (the "Requestor") hereby requests *Inter Partes* reexamination of U.S. Patent No. 7,620,565[1] (" '565 Patent"). The undersigned is counsel of record and represents that he is authorized to act in a representative capacity for Requestor under 37 C.F.R. § 1.34.

I. INTRODUCTION

Requestor requests reexamination of Claims 1-11, 13-15, 17-22, and 25-32 of the '565 Patent in view of the substantial new questions of patentability ("SNQs") presented below. Requestor requests that the Patent Office find SNQs and cancel Claims 1-11, 13-15, 17-22, and 25-32 rendering them null, void, or otherwise unenforceable.

The Patent Office issued the '565 Patent on November 17, 2009. According to Patent Office records, the named applicant Daniel H. Abelow (the "Applicant") assigned the '565 Patent to Ferrara Ethereal, LLC on Dec. 10, 2004. Ferrara Ethereal, LLC assigned the '565 Patent to Webvention, LLC on Nov. 16, 2009. Webvention, LLC assigned the '565 Patent to Lodsys, LLC ("Patent Owner") who is its current owner on Aug. 31, 2010. The Patent Owner has filed at least one action for infringement of the '565 Patent. **Ex. OTH-B**. The Requestor concurrently files a request for *Inter Partes* reexamination of U.S. Patent No. 7,222,078 ('078 Patent) for Claims 1-7, 10-16, 18, 22, 24, 25, 30-32, 38, 46-48, 50-53, and 69-74. Both the '565 Patent and the '078 Patent are owned by Lodsys, LLC.

In allowing the '565 Patent to issue, the Examiner in the original prosecution stated that the prior arts do not disclose:

[1] U.S. Patent 7,620,565 and its application 11/509,701 will be collectively referred to as "the '565 Patent."

> incrementing a counter corresponding to the trigger event upon detection of the trigger event, and **causing the display of a user interface, configured to probe for information regarding a use of the product, if the counter exceeds a threshold**.

Ex. PAT-C, '565 Pros. Hist., Notice of Allowability, p. 3, July 1, 2009 (emphasis added). The prior art relied on in this Request discloses and teaches all the features recited by Claims 1-11, 13-15, 17-22, and 25-32 of the '565 Patent, including the above-recited features that the Examiner in the original prosecution found to contain allowable subject matter.

In addition, the prior art relied on in this Request discloses new, non-cumulative technological teachings that were not previously considered or discussed on the record during the prosecution of the '565 Patent. Had the Examiner considered the prior art relied on in this Request, Claims 1-11, 13-15, 17-22, and 25-32 would not have issued. Reexamination is respectfully requested in view of the SNQs presented below.

II. REQUIREMENTS FOR *INTER PARTES* REEXAMINATION UNDER 37 C.F.R. § 1.915

Pursuant to 37 C.F.R. § 1.915, Requestor satisfies each requirement for *Inter Partes* Reexamination of the '565 Patent. As a patent issuing from an "original filed application" filed after November 29, 1999, the '565 Patent qualifies for *Inter Partes* Reexamination. 37 C.F.R. § 1.913; MPEP, § 2610. The '565 Patent issued from U.S. Patent Application No. 11/509,701 filed on December 10, 2003.

A. Payment Of Fees; 37 C.F.R. § 1.915(a)

Requestor authorizes the Patent Office to charge Deposit Account No. 50-4616 for the fee set in 37 CFR § 1.20(c)(2) for reexamination. The fee for reexamination is $8,800.00, and the fee for an Information Disclosure Statement is $180.00. 37 C.F.R. § 1.915(a). Requestor

further authorizes the Patent Office to charge Deposit Account No. 50-4616 for any other fees necessary in connection with this request for reexamination.

B. <u>Identification Of Claims For Reexamination; 37 C.F.R. § 1.915(b)(1)</u>

Requestor requests reexamination of **Claims 1-11, 13-15, 17-22, and 25-32** of U.S. Patent No. **7,620,565**.

C. <u>Citation Of Prior Art Presented; 37 C.F.R. § 1.915(b)(2)</u>

Patent Office Form SB08 states the patents and printed publications upon which Requestor bases this Request. A complete copy of each listed patent and printed publication is included herewith. As set forth in detail below, SNQs as to Claims 1-11, 13-15, 17-22, and 25-32 are raised with respect to the prior art below. Requestor bases this Request for Reexamination on the following patents:

Ex. PA-A U.S. Patent No. 5,003,384 ("Durden," attachment **AA** to Form SB08)

Ex. PA-B U.S. Patent No. 5,077,582 ("Kravette," attachment **BA** to Form SB08)

Ex. PA-C U.S. Patent No. 5,083,271 ("Thacher," attachment **CA** to Form SB08)

Ex. PA-D U.S. Patent No. 5,956,505 ("Manduley," attachment **DA** to Form SB08)

Ex. PA-E U.S. Patent No. 5,291,416 ("Hutchins," attachment **DEA** to Form SB08)

D. <u>Proposed Rejections; 37 C.F.R. § 1.915(b)(3)</u>

Claims 1-6, 8-11, 13-15, 17-19, 21, 22, and 25-32 are anticipated under 35 U.S.C. § 102(b) by:

- Durden.

Claims 1-6, 8-11, 13-15, 17-19, 21, 22, and 25-32 are anticipated under 35 U.S.C. § 102(e) by each of:

- Kravette;
- Thacher; and
- Manduley.

Claims 1, 2, 5-10, 14, 15, 17-22, and 26-32 are anticipated under 35 U.S.C. § 102(e) by:

- Hutchins.

A statement pointing out each substantial new question of patentability is provided below in Sections VI, VII, and in Exhibits **CC-A** through **CC-E**.

E. <u>Copies Of Prior Art And Translations; 37 C.F.R. § 1.915(b)(4)</u>

A copy of every patent and printed publication relied upon in this Request is attached to Form SB08. **Ex. PA-SB08**.

F. <u>Copy Of U.S. Patent No. 7,620,565; 37 C.F.R. § 1.915(b)(5)</u>

Pursuant to 37 C.F.R. § 1.915(b)(5) and MPEP § 2614, the following exhibits are attached. **Ex. PAT-A** is a copy of the '565 Patent. **Ex. PAT-B** is a copy of the Terminal Disclaimer that was filed for the '565 Patent. To Requestor's knowledge, no reexamination certificate had been issued for the '565 Patent. A copy of the prosecution history of the '565 Patent is attached as **Ex. PAT-C**. To Requestor's knowledge, the '565 Patent has not been held to be unenforceable by a court of competent jurisdiction.[2]

G. <u>Certification Of Service On Patent Owner; 37 C.F.R. § 1.915(b)(6)</u>

The undersigned certifies that a complete and entire copy of this Request for *Inter Partes* Reexamination and all supporting documents have been provided to the Patent Owner by serving the attorney of record at the Patent Office for the '565 Patent as set forth in 37 CFR § 1.33(a):

Lawrence Aaronson
McKeon Meunier Carlin & Curfman, LLC
817 West Peachtree Street
Atlanta, Georgia 30308

[2] As alleged by Patent Owner in the concurrent litigations, and as required by 37 C.F.R. § 1.913, the '565 Patent is still within its period of enforceability for reexamination purposes, to the extent that the '565 Patent has not lapsed for failure to pay maintenance fees, has not expired as a result of any terminal disclaimer, and has not yet been held unenforceable in a court of competent jurisdiction.

The above-identified attorney of record at the Patent Office is also the Patent Owner's current counsel of record.

H. Certification That Estoppel Provisions Do Not Prohibit *Inter Partes* Reexamination; 37 C.F.R. § 1.915(b)(7)

Requestor hereby certifies that it is not prohibited under the provisions of 35 U.S.C. § 317 or 37 C.F.R. § 1.907 from filing this Request for *Inter Partes* reexamination. Requestor may request *Inter Partes* reexamination because neither it nor those in privity with it have previously requested *Inter Partes* reexamination of the '565 Patent. 37 C.F.R. § 1.907; 35 U.S.C. § 317(b); MPEP, § 2612.

I. Statement Identifying Real Party In Interest; 37 C.F.R. § 1.915(b)(8)

The real party in interest is Google Inc. ("Requestor"), a Delaware Corporation having its principal place of business at:

1600 Amphitheatre Parkway
Mountain View, CA 94043

Requestor, as the real party in interest, requests reexamination of the '565 Patent in view of the SNQs presented below. Requestor reserves all rights and defenses available including, without limitation, defenses as to invalidity and unenforceability. By filing this Request, Requestor does not represent, agree, or concur that the '565 Patent is enforceable.

Requestor asserts that Claims 1-11, 13-15, 17-22, and 25-32 are not patentable and as such the U.S. Patent and Trademark Office should reexamine and find Claims 1-11, 13-15, 17-22, and 25-32 unpatentable. To that extent, Claims 1-11, 13-15, 17-22, and 25-32 should be cancelled, rendering it null, void, or otherwise unenforceable.

III. CONCURRENT LITIGATION

The '565 Patent is presently the subject of at least eleven litigations ("Complaints") including:

- *Lodsys LLC v. Brother Int'l Corp. et al.*, Case No. 2:11-cv-00009, in the U.S. District Court for the Eastern District of Texas

- *Lodsys LLC v. Combay Inc. et al.*, Case No. 2:11-cv-00272, in the U.S. *District* Court for the Eastern District of Texas

- *Lodsys LLC v. Adidas America Inc. et al.*, Case No. 2:11-cv-00283, in the U.S. District Court for the Eastern District of Texas

- *Lodsys LLC v. DriveTime Automotive Group Inc. et al.*, Case No. 2:11-cv-00309, in the U.S. District Court for the Eastern District of Texas

- *DriveTime Automotive Group Inc., v. Lodsys LLC*, Case No. 2:11-cv-01307, in the U.S. District Court for Arizona

- *ESET, LLC v. Lodsys LLC*, Case No. 3:11-cv-01285, in the U.S. District Court for the Southern District of California

- *ESET, LLC v. Lodsys LLC*, Case No. 2:11-cv-00650, in the U.S. District Court for the Eastern District of Wisconsin

- *Foresee Results, Inc. v. Lodsys LLC*, Case No. 1:11-cv-03886, in the U.S. District *Court* for the Northern District of Illinois

- *New York Times Co. v. Lodsys LLC*, Case No. 1:11-cv-04004, in the U.S. District *Court* for the Northern District of Illinois

- *LivePerson, Inc. v. Lodsys LLC*, Case No. 1:11-cv-04088, in the U.S. District Court for the Northern District of Illinois

- *OpinionLab, Inc. v. Lodsys LLC*, Case No. 1:11-cv-04015, in the U.S. District *Court* for the Northern District of Illinois

A copy of the eleven Complaints is attached as **Ex. OTH-A** through **OTH-K**.

Requestor respectfully urges that this Request be granted and reexamination conducted not only with "special dispatch," but also with "priority over all other cases" due to the ongoing nature of the underlying litigation. 35 U.S.C. § 305; MPEP § 2661.

IV. OVERVIEW OF THE '565 PATENT AND RELATED PATENTS

A. Summary Of The Disclosure Of The '565 Patent

The '565 Patent is entitled "Customer-based Product Design Module." The '565 Patent issued from U.S. Patent App. No. 11/509,701 (" '701 Application") that was filed on June 11, 2007. The '701 Application is a continuation of U.S. Patent App. No. 09/369,391 (" '391 Application"), filed on August 6, 1999, now U.S. Patent No. 7,133,834, issued November 7, 2006. The 391 Application is a continuation application of U.S. Patent App. No. 08/934,457 (" '457 Application"), filed on September 19, 1997, now U.S. Patent App. No. 5,999,908, issued December 7, 1999. The '457 Application is a continuation of U.S. Patent App. No. 08/243,638 (" '638 Application"), filed on May 16, 1994, now abandoned. The '638 Application is a continuation-in-part of U.S. Patent App. No. 07/926,333 (" '333 Application"), filed on August 6, 1992, now abandoned.

The '565 Patent discloses a Customer-Based Product Design Module (CB-PD Module) that embeds a product feature within a Customer-Directed Product (CDP). **Ex. PAT-A**, '565 Patent, 10:9-11; 16:46-48. Using the CB-PD Module, the users can learn about the product and provide feedback via a two-way link, and the vendors respond to customers and users regardless of where they are located. *Id*, 2:28-35; 8:50-53.

Figure 2: Customer-Based Product Design Module (CB-PDM)

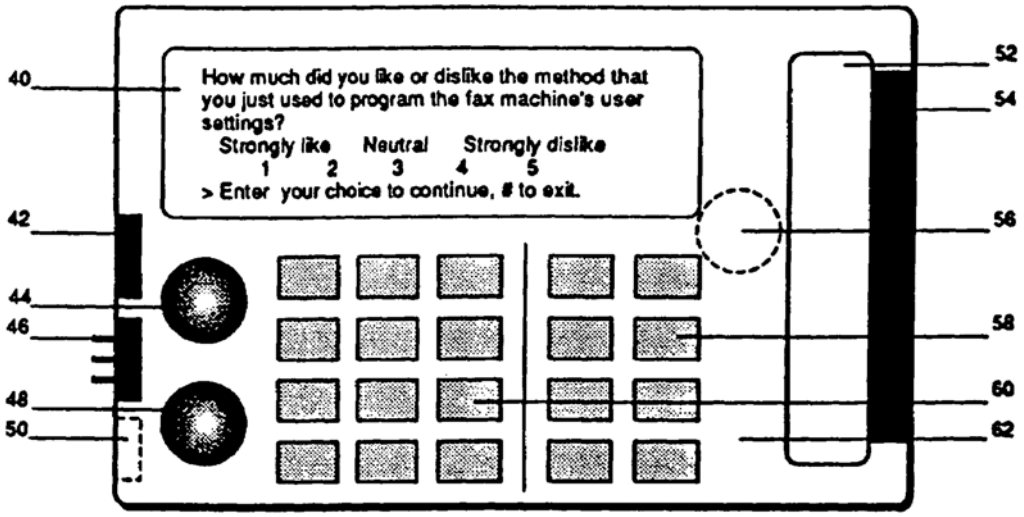

Id, Fig. 2.

As an example of CB-PD Modules, the '565 Patent discloses a VCR combined with a TV. *Id.*, 12:16-19. Pre-recorded questions (*e.g.*, multiple choice questions) are displayed on the TV screen. *Id.*, 12:19-25. The customer answers by pressing channel number keys on the VCR's remote control. *Id.*, 12:25-28. The customer's answers are recorded on a VCR tape. *Id.*, 12:28-30.

The '565 Patent discloses other examples of the CB-PD Module including a software product, a computer, a computer peripheral, data communications devices (*Id.*, 12:58-62), interactive home television, and wireless mobile electronic devices (*Id.*, 12:63-65).

For the interactive television example, the '565 Patent discloses that a cable TV service provider sells vendors a "Customer-Based Product Design Channel" (CB-PDC) as one component of the Customer Design System (CDS). *Id.*, 75:20-24. The questions are provided

on the customer's TV screen. *Id.*, 75:37-39. The customer presses numbers on a keypad or the hand-held remote of the VCR, or calls in on a particular phone number and presses numbers on the phone's keypad. *Id.*, 75:39-43.

The CB-PD Module includes software and optional external components that together form a Customer Design System (CDS). *Id*, 18:2-7. The CDS allows customers, by means of the CB-PD Module, to direct, guide or assist the vendors of the CB-PD module. *Id*, 18:12-16.

As the customer uses a product, trigger events are monitored in the CB-PD Module. *Id*, 18:20-22. A counter is incremented at each occurrence of a trigger event. *Id*, 29: 58-59. Each time a customer uses a product feature, the counter is incremented. *Id*, 56:17-19.

The trigger events are displayed on a user interface of the product including the trigger event's frequency, its type and priority. *Id*, 28:10-20. If a trigger point is reached, the CB-PD Module requests the customer's interactive participation. *Id*, 18:25-27.

The customer reply data is stored in the CD-PD Module. *Id*, 12: 43-44. These reply data is returned to the vendor or a service center. *Id*, 12:44-48.

B. <u>Claims 1-11, 13-15, 17-22, And 25-32 Of The '565 Patent</u>

1. <u>Claim 1</u>

Claim 1 recites:

A unit, comprising:

a memory;

a transmitter; and

a processor, coupled to the memory and to the transmitter, configured to:

monitor a product for an occurrence in the product of a trigger event of a predefined plurality of trigger events,

increment a counter corresponding to the trigger event upon detection of the occurrence of the trigger event,

cause the display of a user interface, configured to probe for information regarding a use of the product, if the counter exceeds a threshold,

cause the memory to store an input received from the user interface, and

cause the transmitter to transmit the input to a server.

2. <u>Claim 2</u>

Claim 2 recites:

The unit of claim 1, wherein the input reflects a request to schedule maintenance.

3. <u>Claim 3</u>

Claim 3 recites:

The unit of claim 1, wherein the input reflects a submission of a purchase order.

4. <u>Claim 4</u>

Claim 4 recites:

The unit of claim 1, wherein the input reflects a request for interactive assistance.

5. <u>Claim 5</u>

Claim 5 recites:

The unit of claim 1, wherein the processor is further configured to:

monitor the product for an occurrence in the product of a second trigger event of the predefined plurality of trigger events, and

increment a second counter corresponding to the second trigger event upon detection of the occurrence of the second trigger event in the product.

6. <u>Claim 6</u>

Claim 6 recites:

The unit of claim 5, wherein the processor is further configured to:

cause the memory to store the second counter; and

cause the transmitter to transmit a value of the second counter.

7. Claim 7

Claim 7 recites:

The unit of claim 1, wherein one trigger event of the predefined plurality of trigger events is an exiting of a feature of the product without a use of the feature.

8. Claim 8

Claim 8 recites:

The unit of claim 1, wherein one of the predefined plurality of trigger events is a problem associated with the product.

9. Claim 9

Claim 9 recites:

The method [sic] of claim 8, wherein the problem is an equipment problem.

10. Claim 10

Claim 10 recites:

The unit of claim 1, wherein a trigger event of the predefined plurality of trigger events is a use of at least one product feature.

11. Claim 11

Claim 11 recites:

The method [sic] of claim 10, wherein the at least one product feature is “undo.”

12. Claim 13

Claim 13 recites:

The unit of claim 1, wherein the product is a cellular telephone.

13. Claim 14

Claim 14 recites:

The unit of claim 1, wherein the processor is further configured to increment the counter corresponding to the trigger event upon detection of a second occurrence of the trigger event.

14. <u>Claim 15</u>

Claim 15 recites:

A method, comprising:

> monitoring a product for an occurrence in the product of a trigger event of a predefined plurality of trigger events;
>
> incrementing a counter corresponding to the trigger event upon detection of the occurrence of the trigger event in the product;
>
> displaying a user interface, configured to probe for information regarding a use of the product, if the counter exceeds a threshold;
>
> storing an input received from the user interface on a device; and
>
> transmitting the input to a server.

15. <u>Claim 17</u>

Claim 17 recites:

The method of claim 15, further comprising:

> monitoring the product for an occurrence in the product of a second trigger event of the predefined plurality of trigger events;
>
> incrementing a value of a second counter corresponding to the second trigger event upon detection of the second trigger event in the product..

16. <u>Claim 18</u>

Claim 18 recites:

The method of claim 15, further comprising:

> storing the second counter on the device; and
>
> transmitting a value of the second counter to the server.

17. <u>Claim 19</u>

Claim 19 recites:

The method of claim 15, wherein one of the predefined plurality of trigger events is a problem associated with the product.

18. <u>Claim 20</u>

Claim 20 recites:

The method of claim 15, wherein one of the predefined plurality of trigger events is an exiting of a feature of the product without a use of the feature.

19. <u>Claim 21</u>

Claim 21 recites:

The method of claim 19, wherein the problem is an equipment problem.

20. <u>Claim 22</u>

Claim 22 recites:

The method of claim 15, wherein one of the predefined plurality of trigger events is a use of at least one product feature.

21. <u>Claim 25</u>

Claim 25 recites:

The method of claim 15, wherein the product is a cellular telephone.

22. <u>Claim 26</u>

Claim 26 recites:

The method of claim 15, further comprising: incrementing the counter corresponding to the trigger event upon detection of a second occurrence of the trigger event in the product.

23. <u>Claim 27</u>

Claim 27 recites:

A tangible computer readable medium having stored thereon, computer executable instructions that, if executed by a computing device, cause the computing device to perform a method comprising:

> monitoring a product for an occurrence in the product of a trigger event of a predefined plurality of trigger events;
>
> incrementing a counter corresponding to the trigger event upon detection of the occurrence of the trigger event in the product;

displaying a user interface, configured to probe for information regarding a use of the product, if the counter exceeds a threshold;

storing an input received from the user interface on a device; and

transmitting the input to a server.

24. <u>Claim 28</u>

Claim 28 recites:

The tangible computer readable medium of claim 27, wherein the monitoring further includes:

monitoring the product for an occurrence in the product of a second trigger event of the predefined plurality of trigger events; and

incrementing a value of a second counter corresponding to the second trigger event upon detection of the occurrence of the second trigger event in the product.

25. <u>Claim 29</u>

Claim 29 recites:

The tangible computer readable medium of claim 27, wherein the method further includes:

storing the second counter on the device; and

transmitting the value of the second counter to the server.

26. <u>Claim 30</u>

Claim 30 recites:

A physical unit, comprising:

means for monitoring a product for an occurrence in the product of a trigger event of a predefined plurality of trigger events;

means for incrementing a counter corresponding to the trigger event upon detection of the occurrence of the trigger event;

means for probing for information regarding a use of the product if the counter exceeds a threshold;

means for storing an input received from the means for probing; and

means for transmitting the input to a server.

27. <u>Claim 31</u>

Claim 31 recites:

The unit of claim 30, further comprising:

> means for monitoring the product for an occurrence in the product of a second trigger event of the predefined plurality of trigger events; and
>
> means for incrementing a value of a second counter corresponding to the second trigger event upon detection of the occurrence of the second trigger event in the product.

28. <u>Claim 32</u>

Claim 32 recites:

The unit of claim 30, further comprising:

> means for storing the second counter on the device; and
>
> means for transmitting the value of the second counter to the server.

C. <u>Prosecution History Of The '565 Patent</u>

<u>*Application Filing*</u>: The Applicant filed Application Serial No. 11/509,701 on August 25, 2006. **Ex. PAT-C**, '565 Pros. Hist., Transmittal of New Application, August 25, 2006. Claims 1-47 were pending in the '565 Application. *Id.*

<u>*Preliminary Amendment*</u>: The Applicant filed a Preliminary Amendment on August 25, 2006. *Id*, Transmittal of Preliminary Amendment, August 25, 2006. Claims 1-47 were canceled and Claims 48-71 were added in the '565 Application. *Id.*

<u>*Non-Final Rejection*</u>: On December 19, 2008, the Patent Office issued a Non-Final Rejection that rejected Claims 48-71 for non-statutory obviousness-type double patenting with U.S. Patent No. 7,222,078. *Id.*, Non-Final Rejection, December 19, 2008. Claims 54, 63, and 70 were rejected under 35 U.S.C. 112, first paragraph. *Id.* Claims 60 and 64 were rejected under 35

U.S.C. 102(b) as being anticipated by U.S. Patent No. 4,816,904 ("McKenna"). *Id.* Claims 48-50 and 55-59, 61-62, 65-68, and 71 were rejected under 35 U.S.C. 103(a) as being unpatentable over McKenna in view of official notice. *Id.* Claim 51 was rejected 35 U.S.C. 103(a) as being unpatentable over McKenna in view of U.S. Patent No. 4,876,592 ("Von Kohorn"). *Id.* Claim 52 was rejected under 35 U.S.C. 103(a) as being unpatentable over McKenna in view of U.S. Patent No. 5,442,759 ("Chiang"). *Id.* Claims 53 and 69 were rejected under 35 U.S.C. 103(a) as being unpatentable over McKenna in view of U.S. Patent No. 4,782,511 ("Nemec"). *Id.*

Amendment: On April 28, 2009, the Applicant filed an amendment to the Specification, Claims, and Abstract. *Id.*, Amendment and Request for Reconsideration, April 28, 2009. The Applicant canceled Claims 49, 56-59, and 65-71, and added new Claims 72-91. The Applicant traversed the Examiner's non-statutory obviousness-type double patenting rejections. *Id.* The Applicant amended Claim 60 to recite "*incrementing a counter corresponding to the trigger event upon detection of the occurrence of the trigger event in the product*" and "*displaying a user interface, configured to probe for information regarding a use of the product, if the counter exceeds a threshold*." *Id.*, (emphasis added).

Interview: On June 23, 2009, the Applicant conducted an interview with the Examiner regarding the patentability of Claims 89-91. *Id.*, Examiner's Interview Summary Record, June 23, 2009. An agreement was reached with the Examiner's proposed amendment to Claim 89. *Id*.

Notice of Allowance: On July 1, 2009, the Patent Office issued a Notice of Allowance for Claims 48, 50-55, 60-64, and 72-91. *Id.*, Notice of Allowance, July 1, 2009. The Examiner allowed Claim 60 and stated that the prior art on record art on record fails to teach or suggest:

> incrementing a counter corresponding to the trigger event upon detection of the trigger event, and causing **the display of a user interface, configured to probe**

for information regarding a use of the product, if the counter exceeds a threshold.

Id., (emphasis added).

Issue Fee Payment and Issuance: On October 1, 2009, the Applicant paid the issue fee. *Id.*, Issue Fee Payment, October 1, 2009. The '565 Patent issued on November 17, 2009. *Id.*, Issue Notification, October 28, 2009.

D. Claim Construction For U.S. Patent No. 7,620,565

For purposes of examination, including reexamination, the claims are to be given their "broadest reasonable interpretation." MPEP, § 2111 (citing *In re Hyatt*, 211 F.3d 1367, 1372 (Fed. Cir. 2000)). For purposes of this Request, the Requester has construed all claim language from Claims 1-11, 13-15, 17-22, and 25-32 using the broadest reasonable interpretation.[3]

V. SUMMARY OF THE PRIOR ART ESTABLISHING SUBSTANTIAL NEW QUESTIONS OF PATENTABILITY

The following patents and publications, alone or in combination, are prior art that provide SNQs of patentability as to Claims 1-11, 13-15, 17-22, and 25-32 of the '565 Patent:

Ex. PA-A U.S. Patent No. 5,003,384 ("Durden," attachment **AA** to Form SB08)

Ex. PA-B U.S. Patent No. 5,077,582 ("Kravette," attachment **BA** to Form SB08)

Ex. PA-C U.S. Patent No. 5,083,271 ("Thacher," attachment **CA** to Form SB08)

Ex. PA-D U.S. Patent No. 5,956,505 ("Manduley," attachment **DA** to Form SB08)

Ex. PA-E U.S. Patent No. 5,291,416 ("Hutchins," attachment **EA** to Form SB08)

The Applicant filed the '701 Application, from which the '565 Patent issued, on June 11, 2007. The '102 Application is based on the '333 Application filed on August 6, 1992.

[3] Different standards apply between claim construction by the Patent Office and by courts in the litigation context. MPEP, § 2111. The Requester reserves the right to propose alternative constructions in other proceedings or contexts.

Durden issued on March 26, 1991 and is prior art against the '565 Patent under 35 U.S.C. § 102(b). Kravette issued from U.S. Pat. App. No. 07/341,018 that was filed on April 120, 1989 and is prior art against the '565 Patent under 35 U.S.C. § 102(e). Thacher issued from U.S. Pat. App. No. 07/228,847 that was filed on August 30, 1988 and is prior art against the '565 Patent under 35 U.S.C. § 102(e). Manduley issued from U.S. Pat. App. No. 07/813,080 that was filed on December 24, 1991 and is prior art against the '565 Patent under 35 U.S.C. § 102(e). Hutchins issued from U.S. Pat. App. No. 07/666,810 that was filed on March 8, 1991 and is prior art against the '565 Patent under 35 U.S.C. § 102(e).

The Patent Office did not consider Durden, Kravette, Thacher, Manduley, or Hutchins during the prosecution of the '565 Patent. **Ex. PAT-C**, '565 Pros. Hist.

Sections VI-VII and **Ex. CC-A** through **CC-E** further point out and explain how each asserted SNQ is substantially different from those raised in the previous examination of the '565 Patent. Section VII and **Ex. CC- A** through **CC-E** demonstrate how each prior art reference or combination of references, presents new, non-cumulative technological teachings that were not previously considered and discussed on the record during the prosecution of the '565 Patent. MPEP §2216.

A. <u>Durden</u>

Durden issued on March 26, 1991. Thus, Durden qualifies as prior art to the '565 Patent under 35 U.S.C. § 102(b). Durden was not before the Patent Office during the initial examination of the '565 Patent. Durden was not cited by the Examiner during the prosecution of the '565 Patent, and did not form a basis for rejection of the claims of the '565 Patent.

Durden discloses an impulse pay-per-view (IPPV) system. **Ex. PA-A**, Durden, Abstract:1. Each of the subscribers of Durden's IPPV system is equipped with a set-top terminal (STT). *Id.*, 6:43-48. The subscriber's set-top terminal has a receiver for television signals, a

detector for any downloadable transactions contained in the television signals which are addressed to the corresponding subscriber, and an IPPV module for processing the transactions. *Id.*, 2:17-22.

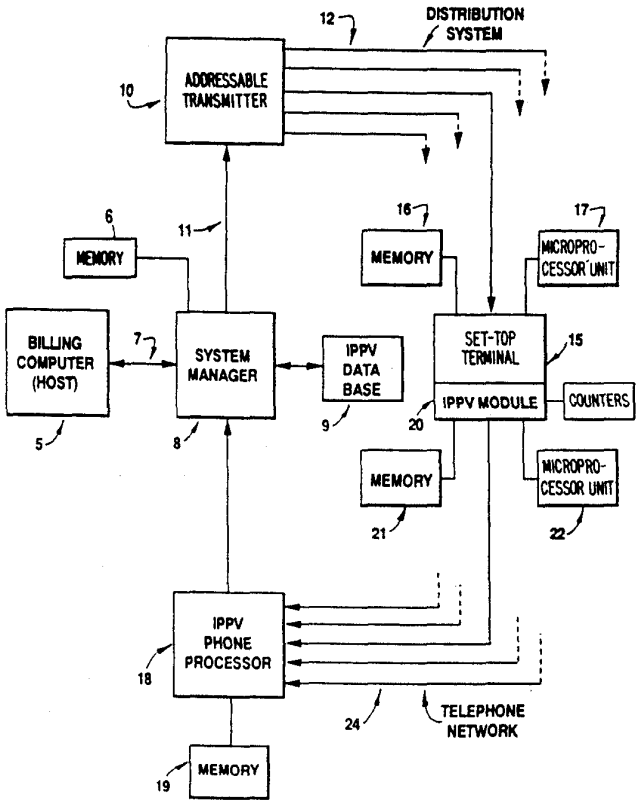

Id., Fig. 1.

The set-top terminal allows the subscriber to tune and descramble the services that he has requested from the cable system operator. *Id.*, 6:43-48. The IPPV module allows the subscriber to authorize his set-top terminal to receive a pay-per-view event. *Id.*, 6:57-61.

Durden discloses a billing computer that functions to control the IPPV service, maintain IPPV access codes, control IPPV event billing, and maintain PPV event and preview definitions. *Id.*, 4:59-61. Durden also discloses a system manager that maintains a list of set-top terminals and authorizes services for the set-top terminals. *Id.*, 5:1-4.

Durden discloses a security counter. *Id.*, 3:41-45. The security counter controls the length of time that an IPPV module will allow the subscriber to preview an IPPV channel without purchasing the program. *Id.*, 11:17-20. When a predetermined length of time has elapsed, the IPPV module of the subscriber's set-top terminal deauthorizes the IPPV channel and closes out all IPPV programs that are in progress. *Id.*, 11:21-24.

Durden also discloses a free time counter that counts down or decrements whenever the subscriber is tuned to a particular channel. *Id.*, 11:9-12.

An operator of the system manager accesses the IPPV data base and displays the event identifiers (IDs) of the events that have been purchased by the subscriber. *Id.*, 5:18-21. At the expiration of the predetermined viewing time period, the IPPV module cuts off viewing to signal the subscriber to buy a pay-per-view event. *Id.*, 12:44-48.

In view of Durden's teachings as discussed above, Durden presents a new, non-cumulative technological teaching that was not previously considered and discussed on the record during the prosecution of the '565 Patent and specifically not discussed with regard to the subject matter of Claims 1-6, 8-11, 13-15, 17-19, 21, 22, and 25-32. Moreover, Durden discloses the following features that the Examiner in the original prosecution found to contain allowable subject matter:

> **incrementing a counter corresponding to the trigger event upon detection of the trigger event**, and causing the **display of a user interface, configured to probe for information regarding a use of the product, if the counter exceeds a threshold**.

Ex. PAT-C, '565 Pros. Hist., Notice of Allowance, June 1, 2009, p. 3 (emphasis added). Thus, Durden presents SNQs of patentability with regard to Claims 1-6, 8-11, 13-15, 17-19, 21, 22, and 25-32.

B. <u>Kravette</u>

Kravette issued from U.S. Pat. App. No. 341,018 that was filed on April 20, 1989. Thus, Kravette qualifies as prior art to the '565 Patent under 35 U.S.C. § 102(e). Kravette was not before the Patent Office during the initial examination of the '565 Patent. Kravette was not cited by the Examiner during the prosecution of the '565 Patent, and did not form a basis for rejection of the claims of the '565 Patent.

Kravette discloses a system for monitoring a plurality of paper processing devices (*e.g.*, photocopier, copying machine). **Ex. PA-B**, Kravette, Abstract:1-2.

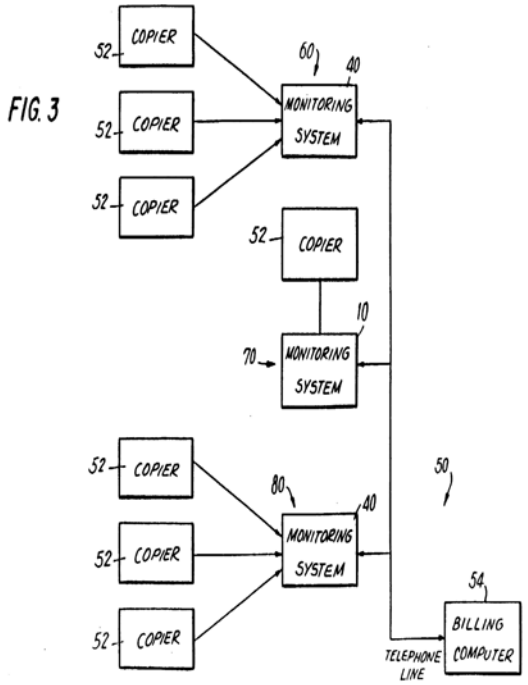

Id., Fig. 3.

Kravette's paper processing device contains a display device for visually displaying the status of the device to the user. *Id.*, 4:38-42. Kravette's paper processing device also has an internal paper counter that counts the number of processed papers and produces an internal count signal that increments the paper counter. *Id.*, 5:19-21. The count signal is input to a monitoring

CPU. *Id.*, 5:22. The diagnostic data and maintenance information of the photocopier are stored in a memory of the paper processing device. *Id.*, 9:14-18.

When the count value generated by the monitoring CPU equals the predetermined count value, the monitoring CPU generates a signal that indicates the predetermined count value has been reached. *Id.*, 8:12-22. Diagnostic and monitoring signals are displayed on the visual display device of the paper processing device. *Id.*, 12:21-24; 8:29-38.

Kravette discloses a portable hand-held input/output device that is connected to the paper processing device. *Id.*, 9:49-52. A service person equipped with a portable hand-held input/output device can manually enter data. *Id.*, 7:11-16. The portable hand-held input/output device communicates with a central station through a modem of the paper processing device. *Id.*, 9:49-52.

In view of Kravette's teachings as discussed above, Kravette presents a new, non-cumulative technological teaching that was not previously considered and discussed on the record during the prosecution of the '565 Patent and specifically not discussed with regard to the subject matter of Claims 1-6, 8-11, 13-15, 17-19, 21, 22, and 25-32. Moreover, Kravette discloses the following features that the Examiner in the original prosecution found to contain allowable subject matter:

> **incrementing a counter corresponding to the trigger event upon detection of the trigger event**, and causing the **display of a user interface, configured to probe for information regarding a use of the product, if the counter exceeds a threshold**.

Ex. PAT-C, '565 Pros. Hist., Notice of Allowance, June 1, 2009, p. 3 (emphasis added). Thus, Kravette presents SNQs of patentability with regard to Claims 1-6, 8-11, 13-15, 17-19, 21, 22, and 25-32.

C. <u>Thacher</u>

Thacher issued from U.S. Pat. App. No. 228,847 that was filed on August 3, 1988. Thus, Thacher qualifies as prior art to the '565 Patent under 35 U.S.C. § 102(e). Thacher was not before the Patent Office during the initial examination of the '565 Patent. Thacher was not cited by the Examiner during the prosecution of the '565 Patent, and did not form a basis for rejection of the claims of the '565 Patent.

Thacher discloses a tournament system for multi-player electronic games. **Ex. PA-C**, Thacher, Abstract:1. Each player has a video game terminal with a keyboard, a processor, and a memory. *Id.*, 6:9-16. The player's game terminal is connected to a central computer by telephone line, CATV cable or other data link. *Id.*, 6:7-9.

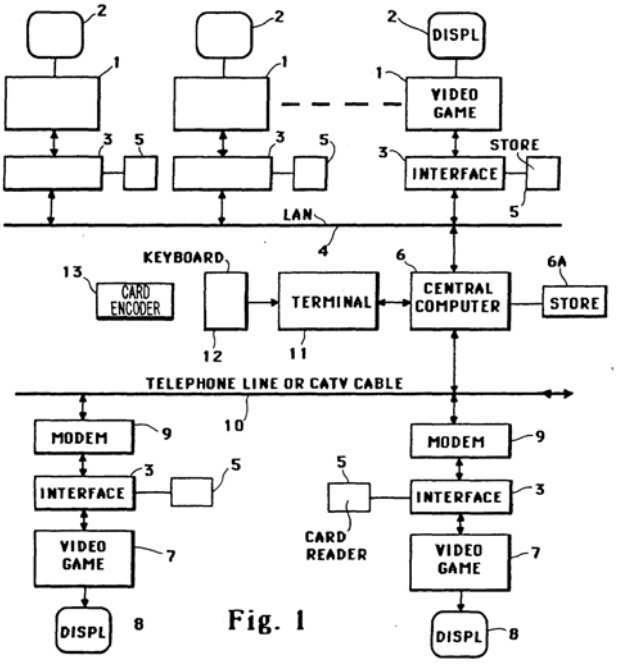

Id., Fig. 1.

As a tournament progresses, and the players' scores are incremented and displayed locally at each terminal. *Id.*, 4:8; 8:1-2. At the end of the game, the scores are transmitted to a

central computer, and a winning score is computed. *Id.*, 4:21-22; 4:62-5:2; 8:12-22. A validated player can enter his score manually on the keyboard of his/her game terminal. *Id.*, 3:3-5.

Thacher also discloses that the count of "men" or tries is decremented to zero, indicating the end of the game. *Id.*, 11:52-57.

In view of Thacher's teachings as discussed above, Thacher presents a new, non-cumulative technological teaching that was not previously considered and discussed on the record during the prosecution of the '565 Patent and specifically not discussed with regard to the subject matter of Claims 1-6, 8-11, 13-15, 17-19, 21, 22, and 25-32. Moreover, Thacher discloses the following features that the Examiner in the original prosecution found to contain allowable subject matter:

> **incrementing a counter corresponding to the trigger event upon detection of the trigger event**, and causing the **display of a user interface, configured to probe for information regarding a use of the product, if the counter exceeds a threshold**.

Ex. PAT-C, '565 Pros. Hist., Notice of Allowance, June 1, 2009, p. 3 (emphasis added). Thus, Thacher presents SNQs of patentability with regard to Claims 1-6, 8-11, 13-15, 17-19, 21, 22, and 25-32.

D. <u>Manduley</u>

Manduley issued from U.S. Pat. App. No. 07/813,080 that was filed on December 24, 1991. Thus, Manduley qualifies as prior art to the '565 Patent under 35 U.S.C. § 102(e). Manduley was not before the Patent Office during the initial examination of the '565 Patent. Manduley was not cited by the Examiner during the prosecution of the '565 Patent, and did not form a basis for rejection of the claims of the '565 Patent.

Manduley discloses a method for activating an optional feature in a data processing device. **Ex. PA-D** Manduley, Abstract:1-2. Manduley's data processing device includes a CPU,

a plurality of memory devices, and a data communication interface. *Id.*, 3:34-41; 3:52-56. Manduley's data processing device runs an application program with one or more optional features. *Id.*, 3:66-4:2.

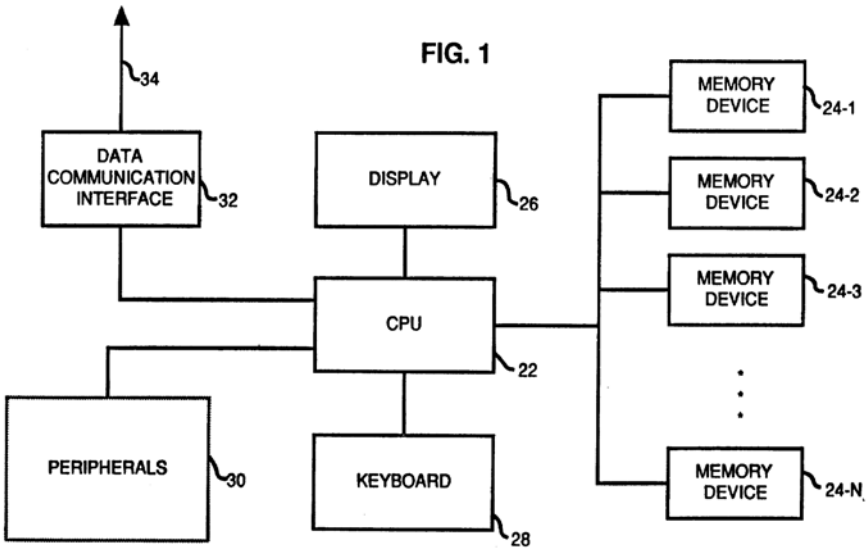

Id., Fig. 1.

The amount of permitted usage of the temporality activated feature is measured based on the quantity of usage. *Id.*, 8:65-9:5. If the user of a data processing device selects temporary activation, menu items are displayed indicating the number of times a feature is available for use, or a length of time during which the feature is available. *Id.*, 6:17-21. A usage counter is updated with respect to the requested feature. *Id.*, 5:45-49.

The updated usage counter is compared with the amount of usage allowed. *Id.*, 5:49-51. A warning is displayed to the user if the permitted duration or quantity of usage will soon expire or be exhausted. *Id.*, 9:11-16.

In view of Manduley's teachings as discussed above, Manduley presents a new, non-cumulative technological teaching that was not previously considered and discussed on the

record during the prosecution of the ‘565 Patent and specifically not discussed with regard to the subject matter of Claims 1-6, 8-11, 13-15, 17-19, 21, 22, and 25-32. Moreover, Manduley discloses the following features that the Examiner in the original prosecution found to contain allowable subject matter:

> **incrementing a counter corresponding to the trigger event upon detection of the trigger event**, and causing the **display of a user interface, configured to probe for information regarding a use of the product, if the counter exceeds a threshold**.

Ex. PAT-C, ‘565 Pros. Hist., Notice of Allowance, June 1, 2009, p. 3 (emphasis added). Thus, Manduley presents SNQs of patentability with regard to Claims 1-6, 8-11, 13-15, 17-19, 21, 22, and 25-32.

E. <u>Hutchins</u>

Hutchins issued from U.S. Pat. App. No. 666,810 that was filed on March 8, 1991. Thus, Hutchins qualifies as prior art under 35 U.S.C. § 102(e). Hutchins was not before the Patent Office during the initial examination of the ‘565 Patent. Hutchins was not cited by the Examiner during the prosecution of the ‘565 Patent, and did not form a basis for rejection of the claims of the ‘565 Patent.

Hutchins discloses a system for providing event feedback for a machine tool. **Ex. PA-E.** Hutchins, Abstract:1-4. Hutchins further discloses software providing event feedback. *Id*., 7:57-68. The system consists of a host computer networked to one or more local computers that are connected to machine tools. *Id*., Fig. 1.

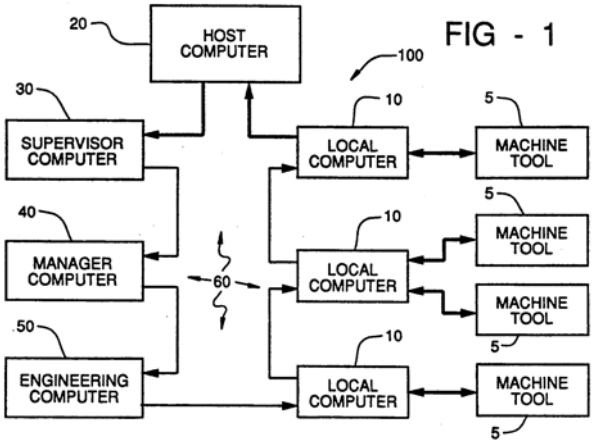

The local computer displays a user interface that allows an operator of a machine tool to record, in real time, the occurrence of significant event data related to a machine tool and/or the operation of the computer program running on the local computer. *Id.*, 3:16-27; 6:32-38. This event data is transmitted via the network to the host computer for further analysis to improve the productivity of the machine tool and/or computer program. *Id.*, Abstract:1; 15:24-28.

Hutchins discloses a local computer that controls operation of a machine tool. This computerized machine tool can be used to manufacture one or more products or one or more batches of products. To manage the manufacturing process, the computerized machine tool utilizes at least two counters, including a "program counter" and a "batch counter." The program counter increments after completion of a "program step." When the program counter exceeds a threshold, it indicates that a part program is complete – i.e. an individual part has been manufactured. The batch counter increments after completion of a "part program." When the batch counter exceeds a threshold, it indicates that a sufficient number of parts have been manufactured according to the predetermined batch size.

Hutchins discloses updating a user interface when each of counters increments and also when the counters exceed a threshold. This updated user interface may indicate the

manufacturing progress, but it also invites a machine tool operator to record significant events reflecting the use of the computerized machine tool. These events are recorded in memory and transmitted to a host computer for further analysis.

In view of Hutchins' teachings as discussed above, Hutchins presents a new, non-cumulative technological teaching that was not previously considered and discussed on the record during the prosecution of the '565 Patent and specifically not discussed with regard to the subject matter of Claims 1, 2, 5-10, 14, 15, 17-22, and 26-32. Moreover, Hutchins discloses the following features that the Examiner in the original prosecution found to contain allowable subject matter:

> **incrementing a counter corresponding to the trigger event upon detection of the trigger event**, and causing the **display of a user interface, configured to probe for information regarding a use of the product, if the counter exceeds a threshold**.

Ex. PAT-C, '565 Pros. Hist., Notice of Allowance, June 1, 2009, p. 3 (emphasis added). Thus, Hutchins presents SNQs of patentability with regard to Claims 1, 2, 5-10, 14, 15, 17-22, and 26-32.

VI. STATEMENT UNDER 37 C.F.R. § 1.915(B)(3) OF EACH SUBSTANTIAL NEW QUESTION OF PATENTABILITY

Durden invalidates Claims 1-6, 8-11, 13-15, 17-19, 21, 22, and 25-32 of the ‘565 Patent under 35 U.S.C. § 102(b). Kravette invalidates Claims 1-6, 8-11, 13-15, 17-19, 21, 22, and 25-32 of the ‘565 Patent under 35 U.S.C. § 102(e). Thacher invalidates Claims 1-6, 8-11, 13-15, 17-19, 21, 22, and 25-32 of the ‘565 Patent under 35 U.S.C. § 102(e). Manduley invalidates Claims 1-6, 8-11, 13-15, 17-19, 21, 22, and 25-32 of the ‘565 Patent under 35 U.S.C. § 102(e). Hutchins invalidates Claims 1, 2, 5-10, 14, 15, 17-22, and 26-32 of the ‘565 Patent under 35 U.S.C. § 102(e).

Claim charts demonstrating the applicability of the above prior art combinations to Claims 1-11, 13-15, 17-22, and 25-32 are attached hereto as **Ex. CC-A** through **CC-E**.

A. <u>Substantial New Questions Of Patentability Under Durden</u>

Durden anticipates Claims 1-6, 8-11, 13-15, 17-19, 21, 22, and 25-32 of the '565 Patent under 35 U.S.C. § 102(b). A claim chart demonstrating the applicability of Durden to Claims 1-6, 8-11, 13-15, 17-19, 21, 22, and 25-32 is attached hereto as **Ex. CC-A**. 37 C.F.R. § 1.915(b).

SNQs are raised by Durden. Durden discloses an impulse pay-per-view (IPPV) system that uses a number of downloadable transactions to effect increased control and diversity. **Ex. PA-A**, Durden, Abstract:1-3. Durden discloses a security counter. *Id.*, 3:41-45. The security counter controls the length of time that an IPPV module will allow the subscriber to preview an IPPV channel without purchasing the program. *Id.*, 11:17-20. When a predetermined length of time has elapsed, the IPPV module of the subscriber's set-top terminal deauthorizes the IPPV channel and closes out all IPPV programs that are in progress. *Id.*, 11:21-24.

Durden also discloses a free time counter that decrements when the subscriber is tuned to a particular pay-per-view channel. *Id.*, 11:9-12. An operator of the system manager accesses the IPPV data base and displays the event identifiers (IDs) of the events that have been purchased by the subscriber. *Id.*, 5:18-21. At the expiration of the predetermined viewing time period, the IPPV module cuts off viewing to signal the subscriber to buy a pay-per-view event. *Id.*, 12:44-48.

These teachings were not present during the prior examination. A reasonable Examiner would consider these teachings important in determining whether or not Claims 1-6, 8-11, 13-15, 17-19, 21, 22, and 25-32 are patentable. Accordingly, Claims 1-6, 8-11, 13-15, 17-19, 21, 22, and 25-32 should be reexamined, rejected under 35 U.S.C. § 102(b) and canceled pursuant to this Request.

B. <u>Substantial New Questions Of Patentability Under Kravette</u>

Kravette anticipates Claims 1-6, 8-11, 13-15, 17-19, 21, 22, and 25-32 of the '565 Patent under 35 U.S.C. § 102(e). A claim chart demonstrating the applicability of Kravette to Claims 1-6, 8-11, 13-15, 17-19, 21, 22, and 25-32 is attached hereto as **Ex. CC-B**. 37 C.F.R. § 1.915(b).

SNQs are raised by Kravette. Kravette discloses a system for monitoring a variable output paper processing device. **Ex. PA-B**, Kravette, Abstract:1-2. Kravette's paper processing device has an internal paper counter that counts the number of processed papers and produces an internal count signal that increments the paper counter. *Id.*, 5:19-21. When the count value generated by the monitoring CPU equals the predetermined count value, the monitoring CPU generates a signal that indicates the predetermined count value has been reached. *Id.*, 8:12-22. Diagnostic and monitoring signals are displayed on the visual display device of the paper processing device. *Id.*, 12:21-24; 8:29-38.

Kravette also discloses a portable hand-held input/output device that is connected to the paper processing device. *Id.*, 9:49-52. A service person equipped with a portable hand-held input/output device can manually enter data. *Id.*, 7:11-16. The portable hand-held input/output device communicates with a billing computer through a modem of the paper processing device. *Id.*, 9:49-52.

These teachings were not present during the prior examination. A reasonable Examiner would consider these teachings important in determining whether or not Claims 1-6, 8-11, 13-15, 17-19, 21, 22, and 25-32 are patentable. Accordingly, Claims 1-6, 8-11, 13-15, 17-19, 21, 22, and 25-32 should be reexamined, rejected under 35 U.S.C. § 102(e) and canceled pursuant to this Request.

C. Substantial New Questions Of Patentability Under Thacher

Thacher anticipates Claims 1-6, 8-11, 13-15, 17-19, 21, 22, and 25-32 of the '565 Patent under 35 U.S.C. § 102(e). A claim chart demonstrating the applicability of Thacher to Claims 1-6, 8-11, 13-15, 17-19, 21, 22, and 25-32 is attached hereto as **Ex. CC-C**. 37 C.F.R. § 1.915(b).

SNQs are raised by Thacher. Thacher discloses a tournament system for electronic games. **Ex. PA-C**, Thacher, Abstract:1. As a tournament progresses, and the players' scores are incremented and displayed locally at each terminal. *Id.*, 4:8; 8:1-2. At the end of the game, the scores are transmitted to a central computer, and a winning score is computed. *Id.*, 4:21-22; 4:62-5:2; 8:12-22. A validated player can enter his score manually on the keyboard of his/her game terminal. *Id.*, 3:3-5. Thacher also discloses that the count of "men" or tries is decremented to zero, indicating the end of the game. *Id.*, 11:52-57.

These teachings were not present during the prior examination. A reasonable Examiner would consider these teachings important in determining whether or not Claims 1-6, 8-11, 13-15, 17-19, 21, 22, and 25-32 are patentable. Accordingly, Claims 1-6, 8-11, 13-15, 17-19, 21, 22, and 25-32 should be reexamined, rejected under 35 U.S.C. § 102(e) and canceled pursuant to this Request.

D. Substantial New Questions Of Patentability Under Manduley

Manduley anticipates Claims 1-6, 8-11, 13-15, 17-19, 21, 22, and 25-32 of the '565 Patent under 35 U.S.C. § 102(e). A claim chart demonstrating the applicability of Manduley to Claims 1-6, 8-11, 13-15, 17-19, 21, 22, and 25-32 is attached hereto as **Ex. CC-D**. 37 C.F.R. § 1.915(b).

SNQs are raised by Manduley. Manduley discloses that the amount of permitted usage of a temporality activated feature is measured based on the quantity of usage. **Ex. PA-D**, Manduley, 8:65-9:5. If the user of a data processing device selects temporary activation, menu

items are displayed indicating the number of times a feature is available for use, or a length of time during which the feature is available. *Id.*, 6:17-21. A usage counter is updated with respect to the requested feature. *Id.*, 5:45-49. The updated usage counter is compared with the amount of usage allowed. *Id.*, 5:49-51. A warning is displayed to the user if the permitted duration or quantity of usage will soon expire or be exhausted. *Id.*, 9:11-16

These teachings were not present during the prior examination. A reasonable Examiner would consider these teachings important in determining whether or not Claims 1-6, 8-11, 13-15, 17-19, 21, 22, and 25-32 are patentable. Accordingly, Claims 1-6, 8-11, 13-15, 17-19, 21, 22, and 25-32 should be reexamined, rejected under 35 U.S.C. § 102(e) and canceled pursuant to this Request.

E. <u>Substantial New Questions Of Patentability Under Hutchins</u>

Hutchins anticipates Claims 1, 2, 5-10, 14, 15, 17-22, and 26-32 of the '565 Patent under 35 U.S.C. § 102(e). A claim chart demonstrating the applicability of Hutchins to Claims 1, 2, 5-10, 14, 15, 17-22, and 26-32 is attached hereto as **Ex. CC-E**. 37 C.F.R. § 1.915(b).

SNQs are raised by Hutchins. Hutchins discloses providing event feedback for computerized machine tools. **Ex. PA-E**, Hutchins, Title; Abstract. As a machine tool is operated, a user interface is presented to the machine tool operator allowing the operator to record significant events related to the use of the computerized machine tools.

Hutchins discloses a local computer that controls operation of a machine tool. This computerized machine tool can be used to manufacture one or more products or one or more batches of products. To manage the manufacturing process, the computerized machine tool utilizes at least two counters, including a "program counter" and a "batch counter." The program counter increments after completion of a "program step." When the program counter exceeds a threshold, it indicates that a part program is complete – i.e. an individual part has been

manufactured. The batch counter increments after completion of a "part program." When the batch counter exceeds a threshold, it indicates that a sufficient number of parts have been manufactured according to the predetermined batch size.

Hutchins discloses updating a user interface when each of counters increments and also when the counters exceed a threshold. This updated user interface may indicate the manufacturing progress, but it also invites a machine tool operator to record significant events reflecting the use of the computerized machine tool. These events are recorded in memory and transmitted to a host computer for further analysis.

These teachings were not present during the prior examination. A reasonable Examiner would consider these teachings important in determining whether or not Claims 1, 2, 5-10, 14, 15, 17-22, and 26-32 are patentable. Accordingly, Claims 1, 2, 5-10, 14, 15, 17-22, and 26-32 should be reexamined, rejected under 35 U.S.C. § 102(e) and cancelled pursuant to this Request.

VII. DETAILED EXPLANATION OF THE SUBSTANTIAL NEW QUESTIONS OF PATENTABILITY

Pursuant to 37 C.F.R. § 1.915(b)(3), Requestor provides a detailed statement of substantial new question of patentability for Claims 1-11, 13-15, 17-22, and 25-32 based on each of:

- Durden;
- Kravette;
- Thacher;
- Manduley; and
- Hutchins.

A. Proposed Rejections And Substantial New Questions Of Patentability

1. Anticipated By Durden Under 35 U.S.C. § 102(b)

a. Claim 1

Claim 1 should be rejected under 35 U.S.C. § 102(b) as unpatentable over Durden. Requestor provides a concise statement of the substantial new question of patentability for Claim 1 based on Durden under 35 U.S.C. § 102(b).

Please see attached Exhibit CC-A for a claim chart comparing Durden with Claim 1 of the '565 Patent under 35 U.S.C. § 102(b)

Claim 1 recites and Durden discloses *"[a] unit, comprising: a memory; a transmitter; and a processor*." **Ex. PAT-A**, '565 Patent, 90:14-17 (emphasis added).

Durden discloses a set-top terminal ("unit") for a cable television system.

> "Each subscriber in the addressable cable system is provided with **a set –top terminal (STT) 15** by the cable operator as schematically indicated in FIG. 1. STT 15 allows the subscriber to tune and descramble the services that he has requested from the cable system operator."

Ex. PA-A, Durden, 6:43–48 (emphasis added).

Durden discloses that the set-top terminal ("unit") has a memory.

> "Module 20 allows the subscriber to authorize his STT to receive a pay–per–view event, store the data associated with the purchase of that event in **memory 21**, and transmit that stored data to the cable operator via the telephone network 24."

Id., 6:57–61 (emphasis added).

Durden discloses that the set-top terminal ("unit") has a transmitter.

> "**A transmitter** coupled to the memory transmits the stored billing information over a telephone network."

Id., 3:39–41 (emphasis added).

Durden discloses that the set-top terminal ("unit") has a microprocessor ("processor").

> "The control apparatus includes a receiver for receiving television signals, a detector for detecting any downloadable transactions contained in the television signals which are addressed to the corresponding subscriber, and **a microprocessor** for processing the transactions detected by the detector."

Id., 2:17-22 (emphasis added).

Claim 1 next recites and Durden discloses "*a processor, coupled to the memory and to the transmitter*." **Ex. PAT-A**, '565 Patent, 90:17 (emphasis added).

Durden discloses that the microprocessor is coupled to the memory.

> "**A memory is coupled to the microprocessor**…"

Ex. PA-A, Durden, 2:25-26 (emphasis added).

Durden discloses that the memory is coupled to the transmitter.

> "**A transmitter coupled to the memory** transmits the stored billing information over a telephone network."

Id., 3:39–41 (emphasis added). Durden's Figure 1 illustrates memory coupled to the set-top terminal, IPPV module, and microprocessor.

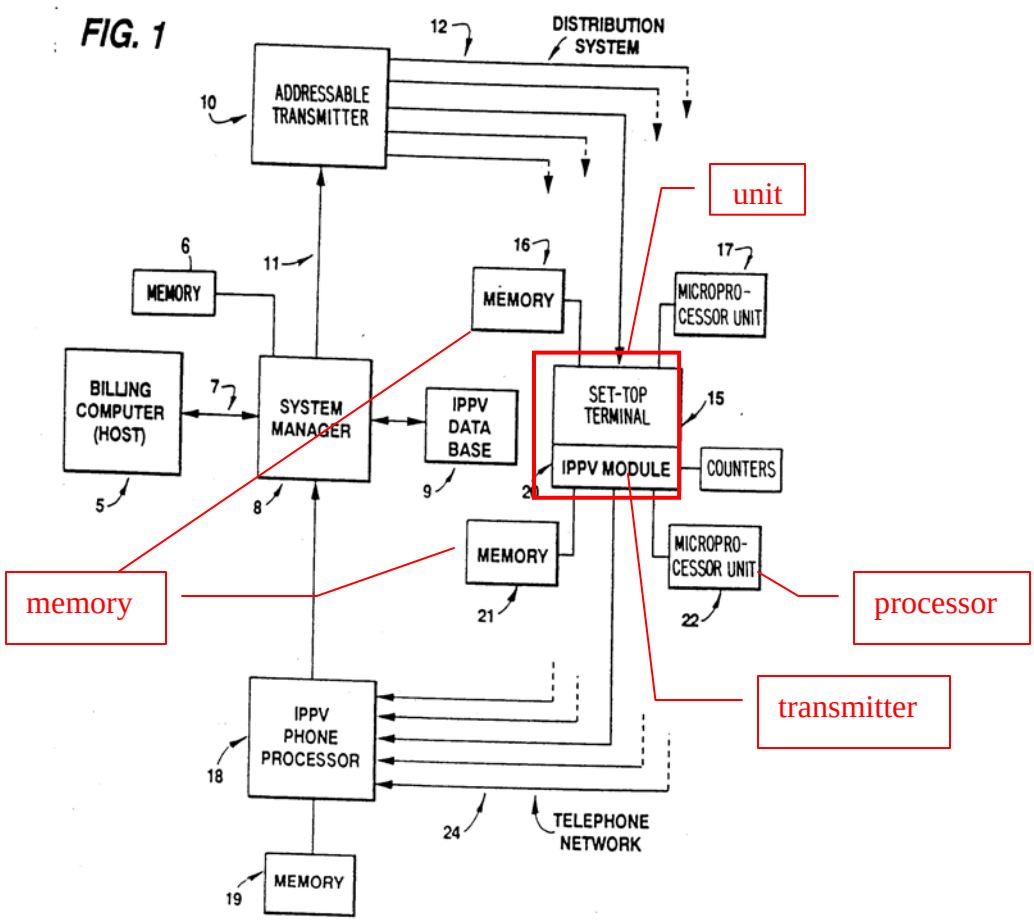

Id., Fig. 1.

Claim 1 next recites and Durden discloses "*[the processor … configured to] monitor a product for an occurrence in the product of a trigger event of a predefined plurality of trigger events*." **Ex. PAT-A**, '565 Patent, 90:17-21 (emphasis added).

Durden discloses a set-top terminal ("product").

> "Each subscriber in the addressable cable system is provided with **a set-top terminal (STT) 15** by the cable operator as schematically indicated in FIG. 1. STT 15 allows the subscriber to tune and descramble the services that he has requested from the cable system operator."

Ex. PA-A, Durden, 6:43-48 (emphasis added).

Durden discloses counting elapsed time ("monitor[ing] … a trigger event") using a counter of the set-top terminal ("product").

> "Once the subscriber has tuned to a channel on which a[n] IPPV event is being shown, **a counter counts down** until the free **time has elapsed**."

Id., 10:47-49 (emphasis added).

Durden discloses a plurality of counters counting elapsed time on pay channels ("a predefined plurality of trigger events").

> "each subscriber module has **a plurality of counters** corresponding to the number of pay channels. A preferred embodiment includes sixteen counters."

Id., 10:51-54 (emphasis added).

Claim 1 next recites and Durden discloses "*[the processor … configured to] increment a counter corresponding to the trigger event upon detection of the occurrence of the trigger event*." **Ex. PAT-A**, '565 Patent, 90:22-23 (emphasis added).

Durden discloses a security counter (*e.g.*, "counter") that allows a subscriber to view an IPPV programming as the time elapses ("detection of the occurrence of the trigger event").

> "**A security counter** controls the length of time that an impulse pay-per-view module will allow the cable TV subscriber to view an impulse pay-per-view channel without receiving an IPPV authorization transaction."

Ex. PA-A, Durden, 11:17-20 (emphasis added).

Durden discloses decrementing a free time value in response to the counter (*e.g.*, "counter") that counts the elapsed time ("trigger event").

> "The memory cell stores the **IPPV event free time** which is periodically **stepped or decremented responsive to the counter until free time has lapsed** for the associated IPPV event channel and, the **stepping or decrementing occurs** only when the IPPV event on that channel is being displayed and only **after preview time has expired**."

Id., 10:60-66 (emphasis added). Durden also discloses decrementing a free time counter (*e.g.*, "counter") when the free time elapses ("trigger event").

> "The **free time counter** is then allowed to **count down or decrement** whenever the subscriber is tuned to that particular channel. The counter is **decremented** on the average every sixty seconds."

Id., 11:9-12 (emphasis added). It is understood that a disclosure of decrementing a counter teaches incrementing the counter.

Claim 1 next recites and Durden discloses "*[the processor … configured to] cause the display of a user interface, configured to probe for information regarding a use of the product, if the counter exceeds a threshold*." **Ex. PAT-A**, '565 Patent, 90:24-26 (emphasis added).

Durden discloses a hand-held remote, a set-top box/converter having an LED display, and a television (collectively "a user interface").

> "The process for performing a pre-buy with a **Scientific Atlanta Set-top Model 8550 or 8585** is illustrated in FIG. 3. With the **converter turned on**, the subscriber depresses the **keyboard keys** "PRG" and "-" of his **hand-held remote control**. If an access code is required to purchase programming, this must be entered before the converter will enter the IPPV mode and display "VCR" using **LED elements**."

Ex. PA-A, Durden, 11:66-12:5 (emphasis added).

Durden discloses that a programming guide is available for probing programming information ("information regarding a use of the product") when the counter has lapsed and before the counter has lapsed.

> "An improperly keyed access code denies one the ability to purchase programming. Once in the IPPV mode, depression of the "AU" key creates access to the pre-buy mode. Once in the pre-buy mode, the **subscriber simply enters the three or four digit event ID number of the program he wishes to purchase**. The ID numbers may be provided in **a programming guide**, for example."

Id., 12:5-12 (emphasis added). The time lapse ("if the counter exceeds a threshold") alters the display (part of the "user interface") to close out the preview/free view of the pay-per-view event.

> "**When that length of time has elapsed**, the impulse pay-per-view module will deauthorize all impulse pay-per-view channels and "**close out" all impulse pay-per-view events that are in progress**."

Id., 11:21-24 (emphasis added).

Durden discloses a preview time and a free time ("information regarding a use of the product") of a pay-per-view event.

> "**Preview time** is defined as a period or window of time at the beginning of an event during which the event or a preview of a future event may be watched without being purchased. **Free time** is defined as a cumulative length of time during an event that the event may be watched without being purchased."

Id., 10:20-25 (emphasis added). Durden discloses an example of setting a preview time (*e.g.*, 8:00-8:30 pm) and a free time (*e.g.*, 8:30-8:34 pm, 9:10-9:15 pm, 9:45-9:50 pm) of a movie (8:00-10:00 pm).

> "For example, suppose the IPPV event consists of **a movie with a starting time of 8:00 p.m. and an ending time of 10:00 p.m**. The system operator may designate a block of time, say from **8:00-8:30**, during which the movie may be viewed without the viewer having to purchase the movie. This would constitute the **preview time**. The system operator may elect to permit additional viewing of the movie for a total of fourteen minutes during the event time. Thus, after the preview time has expired, a total of fourteen minutes of the event may be viewed. An example of how this **free time** may be used is from **8:30-8:34, 9:10-9:15, and 9:45-9:50**. There is no restriction on how the free time is used as long as it does not exceed its predetermined value, in this case, fourteen minutes."

Id., 10:29-43 (emphasis added). It is understood that the information regarding the preview time and free time is displayed on the channel being displayed on the subscriber's television terminal.

Durden discloses a predetermined value ("a threshold").

> "There is no restriction on how the free time is used as long as it does not exceed its **predetermined value**, in this case, fourteen minutes."

Id., 10:40-43 (emphasis added). Durden also discloses decrementing the counter to zero ("the counter exceeds a threshold").

> "When **the counter equals zero**, the event must be purchased to enable further viewing."

Id., 10:49-51 (emphasis added). Durden also discloses decrementing the counter until free time has lapsed ("the counter exceeds a threshold").

> "The memory cell stores the IPPV event free time which is periodically **stepped**

> **or decremented responsive to the counter until free time has lapsed** for the associated IPPV event channel and, the stepping or decrementing occurs only when the IPPV event on that channel is being displayed and only after preview time has expired."

Id., 10:60-66 (emphasis added). It is understood that decrementing a counter from a predetermined value teaches that the counter exceeds a threshold.

Durden discloses cutting off viewing or scrambling the channel ("displaying a user interface") at the expiry of a free-viewing pay-per-view event ("if the counter exceeds a threshold").

> "If an event is both a pay-per-view event and an impulse pay-per-view event, as frequently happens, and a subscriber buys the event as a pay-per-view event, the microprocessor 22 in the IPPV module would normally **cut off viewing after the allocated free time had expired**."

Id., 12:44-48 (emphasis added).

Claim 1 next recites and Durden discloses "*[the processor … configured to] cause the memory to store an input received from the user interface*." **Ex. PAT-A**, '565 Patent, 90:27-28 (emphasis added).

Durden discloses that an access code ("input") is entered by the subscriber.

> "They allow the Host 5 to authorize a subscriber for IPPV purchases and define the "**access code**" **that must be entered by the subscriber** in order to purchase an IPPV event."

Ex. PA-A, Durden, 7:19-22 (emphasis added).

Durden discloses that the subscriber enters the access code by depressing the keyboard keys of a hand-held remote control ("user interface").

> "With the converter turned on, the subscriber depresses the keyboard keys "PRG" and "-" of his **hand-held remote control**. If **an access code** is required to purchase programming, **this must be entered** before the converter will enter the IPPV mode and display "VCR" using LED elements."

Id., 11:68-12:5 (emphasis added).

Durden also discloses that the event ID number ("input") associated with the purchased pay-per-view program is stored in the memory of the set-top terminal.

> "Module 20 allows the subscriber to authorize his STT to receive a pay-per-view event, **store the data associated with the purchase of that event in memory 21**, and transmit that **stored data** to the cable operator via the telephone network 24."

Id., 6:57-61 (emphasis added). Durden also discloses that the IPPV module of the set-top terminal stores data (*e.g.*, access code and event ID number) associated with the purchase of the purchased pay-per-view program.

> "Once in the pre-buy mode, the subscriber simply **enters the three or four digit event ID number** of the program he wishes to purchase. The ID numbers may be provided in a programming guide, for example. After the last digit of each program ID has been entered, it is **stored in nonvolatile memory 21 of the module**."

Id., 12:8-14 (emphasis added).

Claim 1 next recites and Durden discloses "*[the processor … configured to] cause the transmitter to transmit the input to a server*." **Ex. PAT-A**, '565 Patent, 90:29 (emphasis added).

Durden discloses transmitting the stored data (*e.g.*, access code and event ID number) to a cable operator ("server").

> "Module 20 allows the subscriber to authorize his STT to receive a pay-per-view event, store the **data associated with the purchase of that event** in memory 21, and **transmit that stored data to the cable operator via the telephone network 24**."

Ex. PA-A, Durden, 6:57-61 (emphasis added). Durden also discloses transmitting the record of PPV events (*e.g.*, access code and event ID number) purchased by a subscriber to a system manager ("server").

> "This data is **transmitted to the system manager** by the IPPV module 20 via the telephone network 24 and contains **a record of which PPV events have been purchased by each subscriber**."

Id., 7:36-39 (emphasis added).

b. <u>Claim 2</u>

Claim 2 should be rejected under 35 U.S.C. § 102(b) as unpatentable over Durden. Requestor provides a concise statement of the substantial new question of patentability for Claim 2 based on Durden under 35 U.S.C. § 102(b).

Please see attached Exhibit CC-A for a claim chart comparing Durden with Claim 2 of the '565 Patent under 35 U.S.C. § 102(b)

Claim 2 recites "*[t]he unit of claim 1*." **Ex. PAT-A**, '565 Patent, 90:30 (emphasis added). As shown in Section VII.A.1.a, Durden discloses the unit of claim 1.

Claim 2 next recites and Durden discloses that "*the input reflects a request to schedule maintenance*." *Id.*, 90:30-31 (emphasis added).

Durden discloses the subscriber requests an IPPV service/PPV event.

> "Each subscriber in the addressable cable system is provided with a set-top terminal (STT) 15 by the cable operator as schematically indicated in FIG. 1. STT 15 allows the subscriber to tune and descramble the **services that he has requested** from the cable system operator."

EX. PA-A, Durden, 6:43-48 (emphasis added).

Durden discloses that the subscriber's request causes the system manger to schedule the authorization/deauthorization of the requested PPV event.

> "System manager 8 will **schedule the global authorization and deauthorization of PPV events**."

Id., 6:28-30 (emphasis added).

Durden discloses that the subscriber's request for a PPV event is maintained at the billing computer and the system manager.

> "…billing computer 5 functions to control IPPV service, **maintain IPPV access codes**, control IPPV event billing, and **maintain PPV event** and preview definitions."

Id., 4:59-61 (emphasis added). Durden also discloses that the subscriber's request for a PPV event is maintained at the system manager.

> "**Both the IPPV access code and IPPV service code will be maintained** for each IPPV equipped converter **in the system manager converter data base**."

Id., 5:51-53 (emphasis added). It is understood from these teachings of Durden that the subscriber's request is to schedule maintenance.

c. <u>Claim 3</u>

Claim 3 should be rejected under 35 U.S.C. § 102(b) as unpatentable over Durden. Requestor provides a concise statement of the substantial new question of patentability for Claim 3 based on Durden under 35 U.S.C. § 102(b).

Please see attached Exhibit CC-A for a claim chart comparing Durden with Claim 3 of the '565 Patent under 35 U.S.C. § 102(b)

Claim 3 recites "*[t]he unit of claim 1*." **Ex. PAT-A**, '565 Patent, 90:32 (emphasis added). As shown in Section VII.A.1.a, Durden discloses the unit of claim 1.

Claim 3 next recites and Durden discloses that "*the input reflects a submission of a purchase order*." *Id.*, 90:32-33 (emphasis added).

Durden discloses the subscriber requests an IPPV service/PPV event.

> "Each subscriber in the addressable cable system is provided with a set-top terminal (STT) 15 by the cable operator as schematically indicated in FIG. 1. STT 15 allows the subscriber to tune and descramble the **services that he has requested** from the cable system operator."

Ex. PA-A, Durden, 6:43-48 (emphasis added).

Durden discloses the subscriber's request is for purchasing the IPPV/PPV program ("submission of a purchase order").

> "An improperly keyed access code denies one the ability to purchase programming. Once in the IPPV mode, depression of the "AU" key creates access

> to the pre-buy mode. Once in the pre-buy mode, the **subscriber simply enters the three or four digit event ID number of the program he wishes to purchase**. The ID numbers may be provided in **a programming guide**, for example."

Id., 12:5-12 (emphasis added).

d. <u>Claim 4</u>

Claim 4 should be rejected under 35 U.S.C. § 102(b) as unpatentable over Durden. Requestor provides a concise statement of the substantial new question of patentability for Claim 4 based on Durden under 35 U.S.C. § 102(b).

Please see attached Exhibit CC-A for a claim chart comparing Durden with Claim 4 of the '565 Patent under 35 U.S.C. § 102(b)

Claim 4 recites "*[t]he unit of claim 1*." **Ex. PAT-A**, '565 Patent, 90:34 (emphasis added). As shown in Section VII.A.1.a, Durden discloses the unit of claim 1.

Claim 4 next recites and Durden discloses that "*the input reflects a request for interactive assistance*." *Id.*, 90:34-35 (emphasis added).

Durden discloses that a programming guide is available interactive assistance. It is understood that the programming guide provides interactive assistance.

"The ID numbers may be provided in **a programming guide**, for example." **Ex. PA-A**, Durden, 12:11-12 (emphasis added).

e. <u>Claim 5</u>

Claim 5 should be rejected under 35 U.S.C. § 102(b) as unpatentable over Durden. Requestor provides a concise statement of the substantial new question of patentability for Claim 5 based on Durden under 35 U.S.C. § 102(b).

Please see attached Exhibit CC-A for a claim chart comparing Durden with Claim 5 of the '565 Patent under 35 U.S.C. § 102(b)

Claim 5 recites and Durden discloses "*[t]he unit of claim 1*." **Ex. PAT-A**, '565 Patent, 90:36 (emphasis added). As shown in Section VII.A.1.a, Durden discloses the unit of claim 1.

Claim 5 next recites and Durden discloses that "*the processor is further configured to: monitor the product for an occurrence in the product of a second trigger event of the predefined plurality of trigger events*." *Id.*, 90:36-40 (emphasis added).

Durden discloses counting elapsed time ("monitoring … a trigger event") using a counter of the set-top terminal ("product").

> "Once the subscriber has tuned to a channel on which a IPPV event is being shown, **a counter counts down** until the free **time has elapsed**."

Ex. PA-A, Durden, 10:47-49 (emphasis added).

Durden discloses counting elapsed time on each of the plurality of pay channels ("occurrence in the product of a second trigger event").

> "each subscriber module has **a plurality of counters** corresponding to the number of pay channels. A preferred embodiment includes sixteen counters."

Id., 10:51-54 (emphasis added).

Claim 5 next recites and Durden discloses that "[*the processor is further configured to:] increment a second counter corresponding to the second trigger event upon detection of the occurrence of the second trigger event in the product*." **Ex. PAT-A**, '565 Patent, 90:41-43 (emphasis added).

Durden discloses a plurality of counters including "a second counter" that counts elapsed time on the corresponding pay channel ("occurrence of the second trigger event").

> "each subscriber module has **a plurality of counters corresponding to the number of pay channels**. A preferred embodiment includes sixteen counters."

Ex. PA-A, Durden, 10:51-54 (emphasis added).

f. <u>Claim 6</u>

Claim 6 should be rejected under 35 U.S.C. § 102(b) as unpatentable over Durden. Requestor provides a concise statement of the substantial new question of patentability for Claim 6 based on Durden under 35 U.S.C. § 102(b).

Please see attached Exhibit CC-A for a claim chart comparing Durden with Claim 6 of the '565 Patent under 35 U.S.C. § 102(b)

Claim 6 recites and Durden discloses "*[t]he unit of claim 5*." **Ex. PAT-A**, '565 Patent, 90:44 (emphasis added). As shown in Section VII.A.1.e, Durden discloses the unit of claim 5.

Claim 6 next recites and Durden discloses that "*the processor is further configured to: cause the memory to store the second counter*." *Id.*, 90:44-46 (emphasis added).

Durden discloses a plurality of counters including "a second counter."

> "each subscriber module has **a plurality of counters** corresponding to the number of pay channels. A preferred embodiment includes sixteen counters."

Ex. PA-A, Durden, 10:51-54 (emphasis added). It is understood from this disclosure that the second counter is stored in memory.

Claim 6 next recites and Durden discloses that "[*the processor is further configured to:] cause the transmitter to transmit a value of the second counter*." **Ex. PAT-A**, '565 Patent, 90:47-48 (emphasis added).

Durden discloses transmitting the data associated with the purchase.

> "Module 20 allows the subscriber to authorize his STT to receive a pay–per–view event, **store the data associated with the purchase of that event in memory 21**, and **transmit that stored data** to the cable operator via the telephone network 24."

Ex. PA-A, Durden, 6:57–61 (emphasis added). It is understood from this disclosure that the data

associated with the purchase including "a value of the second counter" is transmitted to the billing computer.

g. <u>Claim 8</u>

Claim 8 should be rejected under 35 U.S.C. § 102(b) as unpatentable over Durden. Requestor provides a concise statement of the substantial new question of patentability for Claim 8 based on Durden under 35 U.S.C. § 102(b).

Please see attached Exhibit CC-A for a claim chart comparing Durden with Claim 8 of the '565 Patent under 35 U.S.C. § 102(b)

Claim 8 recites "*[t]he unit of claim 1*." **Ex. PAT-A**, '565 Patent, 90:53 (emphasis added). As shown in Section VII.A.1.a, Durden discloses the unit of claim 1.

Claim 8 next recites and Durden discloses that "*one of the predefined plurality of trigger events is a problem associated with the product*." *Id.*, 90:53-55 (emphasis added).

Durden discloses detecting an unsuccessful response from a phone processor ("problem associated with the product").

> "…after dialing the phone processor, the phone processor sends a signal to the module indicating it has gone off hook. The module will then send its data. Afterwards **the phone processor sends a signal indicating it has received the data**. … These parameters may be sent as part of the transaction shown in FIG. 6. The bit patterns TL0-TL1 represent the **call back attempt** limit and may include values from zero to FF, with zero used to instruct the module to stop calling. L0-L1 represent the host time out or how long the module will wait after dialing the last digit for the first signal from the phone processor. **If no response is received, the IPPV module will consider the call to be unsuccessful and retry at a later time**."

Ex. PA-A, Durden, 13:19-36 (emphasis added).

h. <u>Claim 9</u>

Claim 9 should be rejected under 35 U.S.C. § 102(b) as unpatentable over Durden. Requestor provides a concise statement of the substantial new question of patentability for Claim 9 based on Durden under 35 U.S.C. § 102(b).

Please see attached Exhibit CC-A for a claim chart comparing Durden with Claim 9 of the '565 Patent under 35 U.S.C. § 102(b)

Claim 9 recites "*[t]he method [sic] of claim 8.*" **Ex. PAT-A**, '565 Patent, 90:56 (emphasis added). As shown in Section VII.A.1.g, Durden discloses the unit of claim 8.

Claim 9 next recites and Durden discloses that "*the problem is an equipment problem.*" *Id.*, 90:56-57 (emphasis added).

Durden discloses detecting an unsuccessful response from a phone processor. It is understood the unsuccessful transaction could be caused by an equipment problem.

> "…after dialing the phone processor, the phone processor sends a signal to the module indicating it has gone off hook. The module will then send its data. Afterwards **the phone processor sends a signal indicating it has received the data**. … These parameters may be sent as part of the transaction shown in FIG. 6. The bit patterns TL0-TL1 represent the **call back attempt** limit and may include values from zero to FF, with zero used to instruct the module to stop calling. L0-L1 represent the host time out or how long the module will wait after dialing the last digit for the first signal from the phone processor. **If no response is received, the IPPV module will consider the call to be unsuccessful and retry at a later time**."

Ex. PA-A, Durden, 13:19-36 (emphasis added).

i. <u>Claim 10</u>

Claim 10 should be rejected under 35 U.S.C. § 102(b) as unpatentable over Durden. Requestor provides a concise statement of the substantial new question of patentability for Claim 10 based on Durden under 35 U.S.C. § 102(b).

Please see attached Exhibit CC-A for a claim chart comparing Durden with Claim 10 of the '565 Patent under 35 U.S.C. § 102(b)

Claim 10 recites "*[t]he unit of claim 1*." **Ex. PAT-A**, '565 Patent, 90:58 (emphasis added). As shown in Section VII.A.1.a, Durden discloses the unit of claim 1.

Claim 10 next recites and Durden discloses that "*a trigger event of the predefined plurality of trigger events is a use of at least one product feature*." *Id.*, 90:58-60 (emphasis added).

Durden discloses using a hand-held remote ("one product feature") to enter an access code.

> "With the **converter turned on**, the subscriber depresses the **keyboard keys** "PRG" and "-" of his **hand-held remote control**."

Ex. PA-A, Durden, 11:68-12:2 (emphasis added).

j. <u>Claim 11</u>

Claim 11 should be rejected under 35 U.S.C. § 102(b) as unpatentable over Durden. Requestor provides a concise statement of the substantial new question of patentability for Claim 11 based on Durden under 35 U.S.C. § 102(b).

Please see attached Exhibit CC-A for a claim chart comparing Durden with Claim 11 of the '565 Patent under 35 U.S.C. § 102(b)

Claim 11 recites "*[t]he method [sic] of claim 10*." **Ex. PAT-A**, '565 Patent, 90:61 (emphasis added). As shown in Section VII.A.1.i, Durden discloses the unit of claim 10.

Claim 11 next recites and Durden discloses that "*the at least one product feature is "undo"*." *Id.*, 90:61-62 (emphasis added).

Durden discloses canceling ("undo") any event.

> "After the last digit of each program ID has been entered, it is stored in nonvolatile memory 21 of the module. As indicated, it is possible to step through the list of programs which have been pre-bought with an opportunity to **cancel any event** which the subscriber no longer wishes to view or which have erroneously entered."

Ex. PA-A, Durden, 12:12-18 (emphasis added).

k. <u>Claim 13</u>

Claim 13 should be rejected under 35 U.S.C. § 102(b) as unpatentable over Durden. Requestor provides a concise statement of the substantial new question of patentability for Claim 13 based on Durden under 35 U.S.C. § 102(b).

Please see attached Exhibit CC-A for a claim chart comparing Durden with Claim 13 of the '565 Patent under 35 U.S.C. § 102(b)

Claim 13 recites "*[t]he unit of claim 1*." **Ex. PAT-A**, '565 Patent, 90:65 (emphasis added). As shown in Section VII.A.1.a, Durden discloses the unit of claim 1.

Claim 13 next recites and Durden discloses that "*a cellular telephone*." *Id.*, 90:65-66 (emphasis added).

Durden discloses that the subscriber's module/set-top terminal ("product") includes a telephone. It is understood that the telephone can be a cellular telephone.

> "The present invention is further concerned with a method of instructing a plurality of subscriber modules to report over **a public telephone network** billing information associated with the viewing of selected events on the plurality of channels. A transaction is downloaded to **the subscriber module which includes a telephone number** corresponding to a storage means for storing billing information associated with the plurality of subscribers."

Ex. PA-A, Durden, 3:3-11 (emphasis added).

l. <u>Claim 14</u>

Claim 14 should be rejected under 35 U.S.C. § 102(b) as unpatentable over Durden. Requestor provides a concise statement of the substantial new question of patentability for Claim 14 based on Durden under 35 U.S.C. § 102(b).

Please see attached Exhibit CC-A for a claim chart comparing Durden with Claim 14 of the '565 Patent under 35 U.S.C. § 102(b)

Claim 14 recites "*[t]he unit of claim 1*." **Ex. PAT-A**, '565 Patent, 91:1 (emphasis added). As shown in Section VII.A.1.a, Durden discloses the unit of claim 1.

Claim 14 next recites and Durden discloses that "*the processor is further configured to increment the counter corresponding to the trigger event upon detection of a second occurrence of the trigger event*." *Id.*, 91:1-4 (emphasis added).

Durden discloses decrementing a free time value in response to the counter (*e.g.*, "counter") that counts the elapsed time ("trigger event").

> "The memory cell stores the IPPV event free time which is periodically **stepped or decremented responsive to the counter** until free time has lapsed for the associated IPPV event channel and, the **stepping or decrementing occurs** only when the IPPV event on that channel is being displayed and only after preview time has expired."

Ex. PA-A, Durden, 10:60-66 (emphasis added).

Durden discloses that the free time counter is decremented every sixty seconds ("a second occurrence of the trigger event").

> "The free time counter is then allowed to count down or decrement whenever the subscriber is tuned to that particular channel. The counter is decremented on the **average every sixty seconds**."

Id., 11:9-12 (emphasis added).

m. <u>Claim 15</u>

Claim 15 should be rejected under 35 U.S.C. § 102(b) as unpatentable over Durden. Requestor provides a concise statement of the substantial new question of patentability for Claim 15 based on Durden under 35 U.S.C. § 102(b).

Please see attached Exhibit CC-A for a claim chart comparing Durden with Claim 15 of the '565 Patent under 35 U.S.C. § 102(b)

Claim 15 recites and Durden discloses *"[A] method, comprising: monitoring a product for an occurrence in the product of a trigger event of a predefined plurality of trigger events*." **Ex. PAT-A**, '565 Patent, 91:5-7 (emphasis added).

Durden discloses a set-top terminal ("product").

> "Each subscriber in the addressable cable system is provided with **a set-top terminal (STT) 15** by the cable operator as schematically indicated in FIG. 1. STT 15 allows the subscriber to tune and descramble the services that he has requested from the cable system operator."

Ex. PA-A, Durden, Durden, 6:43-48 (emphasis added).

Durden discloses counting elapsed time ("monitoring … a trigger event") using a counter of the set-top terminal ("product").

> "Once the subscriber has tuned to a channel on which a[n] IPPV event is being shown, **a counter counts down** until the free **time has elapsed**."

Id., 10:47-49 (emphasis added).

Durden discloses a plurality of counters counting elapsed time on pay channels ("a predefined plurality of trigger events").

> "each subscriber module has **a plurality of counters** corresponding to the number of pay channels. A preferred embodiment includes sixteen counters."

Id., 10:51-54 (emphasis added).

Claim 15 next recites and Durden discloses "*incrementing a counter corresponding to the trigger event upon detection of the occurrence of the trigger event in the product*." **Ex. PAT-A**, '565 Patent, 91:8-10 (emphasis added).

Durden discloses a security counter (*e.g.*, "counter") that allows a subscriber to view an IPPV programming as the time elapses ("detection of the occurrence of the trigger event").

> "**A security counter** controls the length of time that an impulse pay-per-view module will allow the cable TV subscriber to view an impulse pay-per-view channel without receiving an IPPV authorization transaction."

Ex. PA-A, Durden, 11:17-20 (emphasis added).

Durden discloses decrementing a counter in response to the counter that counts the elapsed time ("trigger event").

> "The memory cell stores the IPPV event free time which is periodically **stepped or decremented responsive to the counter** until free time has lapsed for the associated IPPV event channel and, the **stepping or decrementing occurs** only when the IPPV event on that channel is being displayed and only after preview time has expired."

Id., 10:60-66 (emphasis added). It is understood that a disclosure of decrementing a counter teaches incrementing the counter.

Durden also discloses decrementing a free time counter (*e.g.*, "counter") when the free time elapses ("trigger event").

> "The free time counter is then allowed to **count down or decrement** whenever the subscriber is tuned to that particular channel. The counter is **decremented** on the average every sixty seconds."

Id., 11:9-12 (emphasis added). It is understood that a disclosure of decrementing a counter teaches incrementing the counter.

Claim 15 next recites and Durden discloses "*displaying a user interface, configured to probe for information regarding a use of the product, if the counter exceeds a threshold*." **Ex. PAT-A**, '565 Patent, 91:11-13 (emphasis added).

Durden discloses a hand-held remote, a set-top box/converter having an LED display, and a television (collectively “a user interface”).

> “The process for performing a pre-buy with a **Scientific Atlanta Set-top Model 8550 or 8585** is illustrated in FIG. 3. With the **converter turned on**, the subscriber depresses the **keyboard keys** "PRG" and "-" of his **hand-held remote control**. If an access code is required to purchase programming, this must be entered before the converter will enter the IPPV mode and display "VCR" using **LED elements**.”

Ex. PA-A, Durden, 11:66-12:5 (emphasis added).

Durden discloses that a programming guide is available for probing programming information (“information regarding a use of the product”) when the counter has lapsed and before the counter has lapsed.

> “An improperly keyed access code denies one the ability to purchase programming. Once in the IPPV mode, depression of the "AU" key creates access to the pre-buy mode. Once in the pre-buy mode, the **subscriber simply enters the three or four digit event ID number of the program he wishes to purchase**. The ID numbers may be provided in **a programming guide**, for example.”

Id., 12:5-12 (emphasis added). The time lapse (“if the counter exceeds a threshold”) alters the display (part of the “user interface”) to close out the preview/free view of the pay-per-view event.

> “**When that length of time has elapsed**, the impulse pay-per-view module will deauthorize all impulse pay-per-view channels and "**close out" all impulse pay-per-view events that are in progress**.”

Id., 11:21-24 (emphasis added).

Durden discloses a preview time and a free time (“information regarding a use of the product”) of a pay-per-view event.

> “**Preview time** is defined as a period or window of time at the beginning of an event during which the event or a preview of a future event may be watched without being purchased. **Free time** is defined as a cumulative length of time during an event that the event may be watched without being purchased.”

Id., 10:20-25 (emphasis added). Durden discloses an example of setting a preview time (*e.g.*, 8:00-8:30 pm) and a free time (*e.g.*, 8:30-8:34 pm, 9:10-9:15 pm, 9:45-9:50 pm) of a movie (8:00-10:00 pm).

> "For example, suppose the IPPV event consists of **a movie with a starting time of 8:00 p.m. and an ending time of 10:00 p.m**. The system operator may designate a block of time, say from **8:00-8:30**, during which the movie may be viewed without the viewer having to purchase the movie. This would constitute the **preview time**. The system operator may elect to permit additional viewing of the movie for a total of fourteen minutes during the event time. Thus, after the preview time has expired, a total of fourteen minutes of the event may be viewed. An example of how this **free time** may be used is from **8:30-8:34, 9:10-9:15, and 9:45-9:50**. There is no restriction on how the free time is used as long as it does not exceed its predetermined value, in this case, fourteen minutes."

Id., 10:29-43 (emphasis added). It is understood that the information regarding the preview time and free time is displayed on the channel being displayed on the subscriber's television terminal.

Durden discloses a predetermined value ("a threshold").

> "There is no restriction on how the free time is used as long as it does not exceed its **predetermined value**, in this case, fourteen minutes."

Id., 10:40-43 (emphasis added). Durden also discloses decrementing the counter to zero ("the counter exceeds a threshold").

> "When **the counter equals zero**, the event must be purchased to enable further viewing."

Id., 10:49-51 (emphasis added). Durden also discloses decrementing the counter until free time has lapsed ("the counter exceeds a threshold").

> "The memory cell stores the IPPV event free time which is periodically **stepped or decremented responsive to the counter until free time has lapsed** for the associated IPPV event channel and, the stepping or decrementing occurs only when the IPPV event on that channel is being displayed and only after preview time has expired."

Id., 10:60-66 (emphasis added). It is understood that decrementing a counter from a predetermined value teaches that the counter exceeds a threshold.

Durden discloses cutting off viewing or scrambling the channel ("displaying a user interface") at the expiry of a free-viewing pay-per-view event ("if the counter exceeds a threshold").

> "If an event is both a pay-per-view event and an impulse pay-per-view event, as frequently happens, and a subscriber buys the event as a pay-per-view event, the microprocessor 22 in the IPPV module would normally **cut off viewing after the allocated free time had expired**."

Id., 12:44-48 (emphasis added).

Claim 15 next recites and Durden discloses "*storing an input received from the user interface on a device*." **Ex. PAT-A**, '565 Patent, 91:14-15 (emphasis added).

Durden discloses that an access code ("input") is entered by the subscriber.

> "They allow the Host 5 to authorize a subscriber for IPPV purchases and define the "**access code**" **that must be entered by the subscriber** in order to purchase an IPPV event."

Ex. PA-A, Durden, 7:19-22 (emphasis added).

Durden discloses that the subscriber enters the access code by depressing the keyboard keys of a hand-held remote control ("user interface").

> "With the converter turned on, the subscriber depresses the keyboard keys "PRG" and "-" of his **hand-held remote control**. If **an access code** is required to purchase programming, **this must be entered** before the converter will enter the IPPV mode and display "VCR" using LED elements."

Id., 11:68-12:5 (emphasis added).

Durden also discloses that the event ID number ("input") associated with the purchased pay-per-view program is stored in the memory of the set-top terminal.

> "Module 20 allows the subscriber to authorize his STT to receive a pay-per-view event, **store the data associated with the purchase of that event in memory 21**, and transmit that **stored data** to the cable operator via the telephone network 24."

Id., 6:57-61 (emphasis added). Durden also discloses that the IPPV module of the set-top terminal stores data (*e.g.*, access code and event ID number) associated with the purchase of the

purchased pay-per-view program.

> "Once in the pre-buy mode, the subscriber simply **enters the three or four digit event ID number** of the program he wishes to purchase. The ID numbers may be provided in a programming guide, for example. After the last digit of each program ID has been entered, it is **stored in nonvolatile memory 21 of the module**."

Id., 12:8-14 (emphasis added).

Claim 15 next recites and Durden discloses "*transmitting the input to a server*." **Ex. PAT-A**, '565 Patent, 91:16 (emphasis added).

Durden discloses transmitting the stored data (*e.g.*, access code and event ID number) to a cable operator ("server").

> "Module 20 allows the subscriber to authorize his STT to receive a pay-per-view event, store the **data associated with the purchase of that event** in memory 21, and **transmit that stored data to the cable operator via the telephone network 24**."

Ex. PA-A, Durden, 6:57-61 (emphasis added). Durden also discloses transmitting the record of PPV events (*e.g.*, access code and event ID number) purchased by a subscriber to a system manager ("server").

> "This data is **transmitted to the system manager** by the IPPV module 20 via the telephone network 24 and contains **a record of which PPV events have been purchased by each subscriber**."

Id., 7:36-39 (emphasis added).

n. <u>Claim 17</u>

Claim 17 should be rejected under 35 U.S.C. § 102(b) as unpatentable over Durden. Requestor provides a concise statement of the substantial new question of patentability for Claim 17 based on Durden under 35 U.S.C. § 102(b).

Please see attached Exhibit CC-A for a claim chart comparing Durden with Claim 17 of the '565 Patent under 35 U.S.C. § 102(b)

Claim 17 recites and Durden discloses "*[t]he method of claim 15*." **Ex. PAT-A**, '565 Patent, 91:20 (emphasis added). As shown in Section VII.A.1.m, Durden discloses the method of claim 15.

Claim 17 next recites and Durden discloses "*monitoring the product for an occurrence in the product of a second trigger event of the predefined plurality of trigger events*." *Id.*, 91:21-23 (emphasis added).

Durden discloses counting elapsed time ("monitoring … a trigger event") using a counter of the set-top terminal ("product").

> "Once the subscriber has tuned to a channel on which a IPPV event is being shown, **a counter counts down** until the free **time has elapsed**."

Ex. PA-A, Durden, 10:47-49 (emphasis added).

Durden discloses counting elapsed time on each of the plurality of pay channels ("occurrence in the product of a second trigger event").

> "each subscriber module has **a plurality of counters** corresponding to the number of pay channels. A preferred embodiment includes sixteen counters."

Id., 10:51-54 (emphasis added).

Claim 17 next recites and Durden discloses that "*incrementing a value of a second counter corresponding to the second trigger event upon detection of the second trigger event in the product*." **Ex. PAT-A**, '565 Patent, 91:24-26 (emphasis added).

Durden discloses a plurality of counters including "a second counter" that counts elapsed time on the corresponding pay channel ("occurrence of the second trigger event").

> "each subscriber module has **a plurality of counters corresponding to the number of pay channels**. A preferred embodiment includes sixteen counters."
>
> **Ex. PA-A**, Durden, 10:51-54 (emphasis added).

o. <u>Claim 18</u>

Claim 18 should be rejected under 35 U.S.C. § 102(b) as unpatentable over Durden. Requestor provides a concise statement of the substantial new question of patentability for Claim 18 based on Durden under 35 U.S.C. § 102(b).

Please see attached Exhibit CC-A for a claim chart comparing Durden with Claim 18 of the '565 Patent under 35 U.S.C. § 102(b)

Claim 18 recites and Durden discloses "*[t]he method of claim 17*." **Ex. PAT-A**, '565 Patent, 91:27 (emphasis added). As shown in Section VII.A.1.n, Durden discloses the method of claim 17.

Claim 18 next recites and Durden discloses that "*storing the second counter on the device*." *Id.*, 91:28 (emphasis added).

Durden discloses a plurality of counters including "a second counter."

> "each subscriber module has **a plurality of counters** corresponding to the number of pay channels. A preferred embodiment includes sixteen counters."

Ex. PA-A, Durden, 10:51-54 (emphasis added). It is understood from this disclosure that the second counter is stored in memory.

Claim 18 next recites and Durden discloses that transmitting a value of the second counter to the server." **Ex. PAT-A**, '565 Patent, 91:29 (emphasis added).

Durden discloses transmitting the data associated with the purchase.

> "Module 20 allows the subscriber to authorize his STT to receive a pay–per–view event, **store the data associated with the purchase of that event in memory 21**, and **transmit that stored data** to the cable operator via the telephone network 24."

Ex. PA-A, Durden, 6:57–61 (emphasis added). It is understood from this disclosure that the data associated with the purchase including "a value of the second counter" is transmitted to the

billing computer.

p. <u>Claim 19</u>

Claim 19 should be rejected under 35 U.S.C. § 102(b) as unpatentable over Durden. Requestor provides a concise statement of the substantial new question of patentability for Claim 19 based on Durden under 35 U.S.C. § 102(b).

Please see attached Exhibit CC-A for a claim chart comparing Durden with Claim 19 of the '565 Patent under 35 U.S.C. § 102(b)

Claim 19 recites "*[t]he method of claim 15*." **Ex. PAT-A**, '565 Patent, 91:30 (emphasis added). As shown in Section VII.A.1.m, Durden discloses the method of claim 15.

Claim 19 next recites and Durden discloses that "*one of the predefined plurality of trigger events is a problem associated with the product*." *Id.*, 91:30-32 (emphasis added).

Durden discloses detecting an unsuccessful response from a phone processor ("problem associated with the product").

> "…after dialing the phone processor, the phone processor sends a signal to the module indicating it has gone off hook. The module will then send its data. Afterwards **the phone processor sends a signal indicating it has received the data**. … These parameters may be sent as part of the transaction shown in FIG. 6. The bit patterns TL0-TL1 represent the **call back attempt** limit and may include values from zero to FF, with zero used to instruct the module to stop calling. L0-L1 represent the host time out or how long the module will wait after dialing the last digit for the first signal from the phone processor. **If no response is received, the IPPV module will consider the call to be unsuccessful and retry at a later time**."

Ex. PA-A, Durden, 13:19-36 (emphasis added).

q. <u>Claim 21</u>

Claim 21 should be rejected under 35 U.S.C. § 102(b) as unpatentable over Durden. Requestor provides a concise statement of the substantial new question of patentability for Claim 21 based on Durden under 35 U.S.C. § 102(b).

Please see attached Exhibit CC-A for a claim chart comparing Durden with Claim 21 of the '565 Patent under 35 U.S.C. § 102(b)

Claim 21 recites "*[t]he method of claim 19*." **Ex. PAT-A**, '565 Patent, 91:36 (emphasis added). As shown in Section VII.A.1.p, Durden discloses the method of claim 19.

Claim 21 next recites and Durden discloses that "*the problem is an equipment problem*." *Id.*, 91:36-37 (emphasis added).

Durden discloses detecting an unsuccessful response from a phone processor. It is understood the unsuccessful transaction could be caused by an equipment problem.

> "…after dialing the phone processor, the phone processor sends a signal to the module indicating it has gone off hook. The module will then send its data. Afterwards **the phone processor sends a signal indicating it has received the data**. … These parameters may be sent as part of the transaction shown in FIG. 6. The bit patterns TL0-TL1 represent the **call back attempt** limit and may include values from zero to FF, with zero used to instruct the module to stop calling. L0-L1 represent the host time out or how long the module will wait after dialing the last digit for the first signal from the phone processor. **If no response is received, the IPPV module will consider the call to be unsuccessful and retry at a later time**."

Ex. PA-A, Durden, 13:19-36 (emphasis added).

r. <u>Claim 22</u>

Claim 22 should be rejected under 35 U.S.C. § 102(b) as unpatentable over Durden. Requestor provides a concise statement of the substantial new question of patentability for Claim 22 based on Durden under 35 U.S.C. § 102(b).

Please see attached Exhibit CC-A for a claim chart comparing Durden with Claim 22 of the '565 Patent under 35 U.S.C. § 102(b)

Claim 22 recites "*[t]he method of claim 15*." **Ex. PAT-A**, '565 Patent, 91:39 (emphasis added). As shown in Section VII.A.1.m, Durden discloses the method of claim 15.

Claim 22 next recites and Durden discloses that "*one of the predefined plurality of trigger events is a use of at least one product feature*." *Id.*, 91:39-41 (emphasis added).

Durden discloses using a hand-held remote ("one product feature") to enter an access code.

> "With the **converter turned on**, the subscriber depresses the **keyboard keys** "PRG" and "-" of his **hand-held remote control**."

Ex. PA-A, Durden, 11:68-12:2 (emphasis added).

s. <u>Claim 25</u>

Claim 25 should be rejected under 35 U.S.C. § 102(b) as unpatentable over Durden. Requestor provides a concise statement of the substantial new question of patentability for Claim 25 based on Durden under 35 U.S.C. § 102(b).

Please see attached Exhibit CC-A for a claim chart comparing Durden with Claim 25 of the '565 Patent under 35 U.S.C. § 102(b)

Claim 25 recites "*[t]he method of claim 15*." **Ex. PAT-A**, '565 Patent, 91:46 (emphasis added). As shown in Section VII.A.1.m, Durden discloses the method of claim 15.

Claim 25 next recites and Durden discloses that "*the product is a cellular telephone*." *Id.*, 91:46-47 (emphasis added).

Durden discloses that the subscriber's module/set-top terminal ("product") includes a telephone. It is understood that the telephone can be a cellular telephone.

> "The present invention is further concerned with a method of instructing a plurality of subscriber modules to report over **a public telephone network** billing information associated with the viewing of selected events on the plurality of channels. A transaction is downloaded to **the subscriber module which includes a telephone number** corresponding to a storage means for storing billing information associated with the plurality of subscribers."

Ex. PA-A, Durden, 3:2-11 (emphasis added).

t. <u>Claim 26</u>

Claim 26 should be rejected under 35 U.S.C. § 102(b) as unpatentable over Durden. Requestor provides a concise statement of the substantial new question of patentability for Claim 26 based on Durden under 35 U.S.C. § 102(b).

Please see attached Exhibit CC-A for a claim chart comparing Durden with Claim 26 of the '565 Patent under 35 U.S.C. § 102(b)

Claim 26 recites "*[t]he method of claim 15*." **Ex. PAT-A**, '565 Patent, 91:48 (emphasis added). As shown in Section VII.A.1.m, Durden discloses the method of claim 15.

Claim 26 next recites and Durden discloses "*further comprising: incrementing the counter corresponding to the trigger event upon detection of a second occurrence of the trigger event in the product*." *Id.*, 91:48-51 (emphasis added).

Durden discloses decrementing a free time value in response to the counter (*e.g.*, "counter") that counts the elapsed time ("trigger event").

> "The memory cell stores the IPPV event free time which is periodically **stepped or decremented responsive to the counter** until free time has lapsed for the associated IPPV event channel and, the **stepping or decrementing occurs** only when the IPPV event on that channel is being displayed and only after preview time has expired."

Ex. PA-A, Durden, 10:60-66 (emphasis added).

Durden discloses that the free time counter is decremented every sixty seconds ("a second occurrence of the trigger event").

> "The free time counter is then allowed to count down or decrement whenever the subscriber is tuned to that particular channel. The counter is decremented on the **average every sixty seconds**."

Id., 11:9-12 (emphasis added).

u. <u>Claim 27</u>

Claim 27 should be rejected under 35 U.S.C. § 102(b) as unpatentable over Durden. Requestor provides a concise statement of the substantial new question of patentability for Claim 27 based on Durden under 35 U.S.C. § 102(b).

Please see attached Exhibit CC-A for a claim chart comparing Durden with Claim 27 of the '565 Patent under 35 U.S.C. § 102(b)

Claim 27 recites and Durden discloses "*[a] tangible computer readable medium having stored thereon, computer executable instructions that, if executed by a computing device, cause the computing device to perform a method*." **Ex. PAT-A**, '565 Patent, 92:1-4 (emphasis added).

Durden discloses a control apparatus ("computing device") for an individual subscriber in a cable television system.

> "This object may be achieved in **a control apparatus** for an individual subscriber in a cable television system which distributes a television signal from a headend office to a plurality of subscribers…"

Ex. PA-A, Durden, 2:11:14 (emphasis added).

Durden discloses a processor ("computing device") that processes instructions.

> "**A processor processes instructions** from a system operator."

Id, 2:44-45 (emphasis added).

Durden discloses a non-volatile memory (NVM) ("tangible computer readable medium") for storing parameters ("instructions").

> "The subscriber is then billed for the events that he has purchased. IPPV module 20 receives the IPPV transactions from ATX 10 via distribution system 12 and **stores the IPPV parameters in non-volatile memory (NVM 21)**."

Id, 6:61-65 (emphasis added).

Claim 27 next recites and Durden discloses "*monitoring a product for an occurrence in the product of a trigger event of a predefined plurality of trigger events*." **Ex. PAT-A**, '565 Patent, 92:5-6 (emphasis added).

Durden discloses a set-top terminal ("product").

> "Each subscriber in the addressable cable system is provided with **a set-top terminal (STT) 15** by the cable operator as schematically indicated in FIG. 1. STT 15 allows the subscriber to tune and descramble the services that he has requested from the cable system operator."

Ex. PA-A, Durden, 6:43-48 (emphasis added).

Durden discloses counting elapsed time ("monitoring … a trigger event") using a counter of the set-top terminal ("product").

> "Once the subscriber has tuned to a channel on which a[n] IPPV event is being shown, **a counter counts down** until the free **time has elapsed**."

Id., 10:47-49 (emphasis added).

Durden discloses a plurality of counters counting elapsed time on pay channels ("a predefined plurality of trigger events").

> "each subscriber module has **a plurality of counters** corresponding to the number of pay channels. A preferred embodiment includes sixteen counters."

Id., 10:51-54 (emphasis added).

Claim 27 next recites and Durden discloses "*incrementing a counter corresponding to the trigger event upon detection of the occurrence of the trigger event in the product*." **Ex. PAT-A**, '565 Patent, 92:7-9 (emphasis added).

Durden discloses a security counter (*e.g.*, "counter") that allows a subscriber to view an IPPV programming as the time elapses ("detection of the occurrence of the trigger event").

> "**A security counter** controls the length of time that an impulse pay-per-view module will allow the cable TV subscriber to view an impulse pay-per-view channel without receiving an IPPV authorization transaction."

Ex. PA-A, Durden, 11:17-20 (emphasis added).

Durden discloses decrementing a counter in response to the counter that counts the elapsed time ("trigger event").

> "The memory cell stores the IPPV event free time which is periodically **stepped or decremented responsive to the counter** until free time has lapsed for the associated IPPV event channel and, the **stepping or decrementing occurs** only when the IPPV event on that channel is being displayed and only after preview time has expired."

Id., 10:60-66 (emphasis added). Durden also discloses decrementing a free time counter (*e.g.*, "counter") when the free time elapses ("trigger event").

> "The free time counter is then allowed to **count down or decrement** whenever the subscriber is tuned to that particular channel. The counter is **decremented** on the average every sixty seconds."

Id., 11:9-12 (emphasis added). It is understood that a disclosure of decrementing a counter teaches incrementing the counter.

Claim 27 next recites and Durden discloses "*displaying a user interface, configured to probe for information regarding a use of the product, if the counter exceeds a threshold*."

Ex. PAT-A, '565 Patent, 92:10-12 (emphasis added).

Durden discloses a hand-held remote, a set-top box/converter having an LED display, and a television (collectively "a user interface").

> "The process for performing a pre-buy with a **Scientific Atlanta Set-top Model 8550 or 8585** is illustrated in FIG. 3. With the **converter turned on**, the subscriber depresses the **keyboard keys** "PRG" and "-" of his **hand-held remote control**. If an access code is required to purchase programming, this must be entered before the converter will enter the IPPV mode and display "VCR" using **LED elements**."

Ex. PA-A, Durden, 11:66-12:5 (emphasis added).

Durden discloses that a programming guide is available for probing programming information ("information regarding a use of the product") when the counter has lapsed and before the counter has lapsed.

> "An improperly keyed access code denies one the ability to purchase programming. Once in the IPPV mode, depression of the "AU" key creates access to the pre-buy mode. Once in the pre-buy mode, the **subscriber simply enters the three or four digit event ID number of the program he wishes to purchase**. The ID numbers may be provided in **a programming guide**, for example."

Id., 12:5-12 (emphasis added). The time lapse ("if the counter exceeds a threshold") alters the display (part of the "user interface") to close out the preview/free view of the pay-per-view event.

> "**When that length of time has elapsed**, the impulse pay-per-view module will deauthorize all impulse pay-per-view channels and "**close out" all impulse pay-per-view events that are in progress**."

Id., 11:21-24 (emphasis added).

Durden discloses a preview time and a free time ("information regarding a use of the product") of a pay-per-view event.

> "**Preview time** is defined as a period or window of time at the beginning of an event during which the event or a preview of a future event may be watched without being purchased. **Free time** is defined as a cumulative length of time during an event that the event may be watched without being purchased."

Id, 10:20-25 (emphasis added) Durden discloses an example of setting a preview time (*e.g.*, 8:00-8:30 pm) and a free time (*e.g.*, 8:30-8:34 pm, 9:10-9:15 pm, 9:45-9:50 pm) of a movie (8:00-10:00 pm).

> "For example, suppose the IPPV event consists of **a movie with a starting time of 8:00 p.m. and an ending time of 10:00 p.m**. The system operator may designate a block of time, say from **8:00-8:30**, during which the movie may be viewed without the viewer having to purchase the movie. This would constitute the **preview time**. The system operator may elect to permit additional viewing of the movie for a total of fourteen minutes during the event time. Thus, after the preview time has expired, a total of fourteen minutes of the event may be viewed.

> An example of how this **free time** may be used is from **8:30-8:34, 9:10-9:15, and 9:45-9:50**. There is no restriction on how the free time is used as long as it does not exceed its predetermined value, in this case, fourteen minutes."

Id, 10:29-43 (emphasis added). It is understood that the information regarding a preview time and free time is displayed on the channel being displayed on the subscriber's television terminal.

Durden discloses cutting off viewing or scrambling the channel ("displaying a user interface") of an expired free time ("information regarding a use of the product").

> "If an event is both a pay-per-view event and an impulse pay-per-view event, as frequently happens, and a subscriber buys the event as a pay-per-view event, the microprocessor 22 in the IPPV module would normally **cut off viewing after the allocated free time had expired**."

Id, 12:44-48 (emphasis added).

Durden discloses a predetermined value ("a threshold").

> "There is no restriction on how the free time is used as long as it does not exceed its **predetermined value**, in this case, fourteen minutes."

Id, 10:40-43 (emphasis added). Durden also discloses that the predetermined value for the free time can be set.

> "The **predetermined value or sum of free time** is set by selecting a value for the free time bit pattern F."

Id, 10:44-45 (emphasis added). Durden discloses decrementing the counter to zero ("the counter exceeds a threshold").

> "When **the counter equals zero**, the event must be purchased to enable further viewing."

Id, 10:49-51 (emphasis added). Durden also discloses decrementing the counter until free time has lapsed ("the counter exceeds a threshold").

> "The memory cell stores the IPPV event free time which is periodically **stepped or decremented responsive to the counter until free time has lapsed** for the associated IPPV event channel and, the stepping or decrementing occurs only when the IPPV event on that channel is being displayed and only after preview time has expired."

Id, 10:60-66 (emphasis added). It is understood that decrementing a counter from a predetermined value teaches that the counter exceeds a threshold.

Claim 27 next recites and Durden discloses "*storing an input received from the user interface on a device*." **Ex. PAT-A**, '565 Patent, 92:13-14 (emphasis added).

Durden discloses that an access code ("input") is entered by the subscriber.

> "They allow the Host 5 to authorize a subscriber for IPPV purchases and define the "**access code" that must be entered by the subscriber** in order to purchase an IPPV event."

Ex. PA-A, Durden, 7:19-22 (emphasis added).

Durden discloses that the subscriber enters the access code ("input") by depressing the keyboard keys of a hand-held remote control ("user interface").

> "With the converter turned on, the subscriber depresses the keyboard keys "PRG" and "-" of his **hand-held remote control**. If **an access code** is required to purchase programming, **this must be entered** before the converter will enter the IPPV mode and display "VCR" using LED elements."

Id, 11:68-12:5 (emphasis added).

Durden also discloses that the event ID number ("input") associated with the purchased pay-per-view program is stored in the memory.

> "Once in the pre-buy mode, the subscriber simply **enters the three or four digit event ID number** of the program he wishes to purchase. The ID numbers may be provided in a programming guide, for example. **After the last digit of each program ID has been entered, it is stored in nonvolatile memory 21 of the module**."

Id, 12:8-14 (emphasis added). Durden also discloses that the IPPV module of the set-top terminal stores data (*e.g.*, access code and event ID number) associated with the purchase of the purchased pay-per-view program.

> "Module 20 allows the subscriber to authorize his STT to receive a pay-per-view event, **store the data associated with the purchase of that event in memory 21**,

and transmit that **stored data** to the cable operator via the telephone network 24."

Id, 6:57-61 (emphasis added).

Claim 27 next recites and Durden discloses "*transmitting the input to a server*." **Ex. PAT-A**, '565 Patent, 92:15 (emphasis added).

Durden discloses transmitting the stored data (*e.g.*, access code and event ID number) to a cable operator ("server").

> "Module 20 allows the subscriber to authorize his STT to receive a pay-per-view event, store the **data associated with the purchase of that event** in memory 21, **and transmit that stored data to the cable operator via the telephone network 24**."

Ex. PA-A, Durden, 6:57-61 (emphasis added). Durden also discloses transmitting the record of PPV events (*e.g.*, access code and event ID number) purchased by a subscriber to a system manager ("server").

> "This data is **transmitted to the system manager** by the IPPV module 20 via the telephone network 24 and contains **a record of which PPV events have been purchased by each subscriber**."

Id, 7:36-39 (emphasis added).

v. <u>Claim 28</u>

Claim 28 should be rejected under 35 U.S.C. § 102(b) as unpatentable over Durden. Requestor provides a concise statement of the substantial new question of patentability for Claim 28 based on Durden under 35 U.S.C. § 102(b).

Please see attached Exhibit CC-A for a claim chart comparing Durden with Claim 28 of the '565 Patent under 35 U.S.C. § 102(b)

Claim 28 recites and Durden discloses "*[t]he tangible computer readable medium of claim 27*." **Ex. PAT-A**, '565 Patent, 92:16 (emphasis added). As shown in Section VII.A.1.u, Durden discloses the tangible computer readable medium of claim 27.

Claim 28 next recites and Durden discloses that "*the monitoring further includes: monitoring the product for an occurrence in the product of a second trigger event of the predefined plurality of trigger events*." *Id.*, 92:17-20 (emphasis added).

Durden discloses counting elapsed time ("monitoring … a trigger event") using a counter of the set-top terminal ("product").

> "Once the subscriber has tuned to a channel on which a IPPV event is being shown, **a counter counts down** until the free **time has elapsed**."

Ex. PA-A, Durden, 10:47-49 (emphasis added).

Durden discloses counting elapsed time on each of the plurality of pay channels ("occurrence in the product of a second trigger event").

> "each subscriber module has **a plurality of counters** corresponding to the number of pay channels. A preferred embodiment includes sixteen counters."

Id., 10:51-54 (emphasis added).

Claim 28 next recites and Durden discloses "*incrementing a value of a second counter corresponding to the second trigger event upon detection of the occurrence of the second trigger event in the product*." **Ex. PAT-A**, '565 Patent, 92:21-23 (emphasis added).

Durden discloses a plurality of counters including "a second counter" that counts elapsed time on the corresponding pay channel ("occurrence of the second trigger event").

> "each subscriber module has **a plurality of counters corresponding to the number of pay channels**. A preferred embodiment includes sixteen counters."
>
> **Ex. PA-A**, Durden, 10:51-54 (emphasis added).

w. <u>Claim 29</u>

Claim 29 should be rejected under 35 U.S.C. § 102(b) as unpatentable over Durden. Requestor provides a concise statement of the substantial new question of patentability for Claim 29 based on Durden under 35 U.S.C. § 102(b).

Please see attached Exhibit CC-A for a claim chart comparing Durden with Claim 29 of the '565 Patent under 35 U.S.C. § 102(b)

Claim 29 recites and Durden discloses "*[t]he tangible computer readable medium of claim 27 [sic]*." **Ex. PAT-A**, '565 Patent, 92:24 (emphasis added). As shown in Section VII.A.1.v, Durden discloses the tangible computer readable medium of claim 28.

Claim 29 next recites and Durden discloses "*storing the second counter on the device*." *Id.*, 92:25-26 (emphasis added).

Durden discloses a plurality of counters including "a second counter."

> "each subscriber module has **a plurality of counters** corresponding to the number of pay channels. A preferred embodiment includes sixteen counters."

Ex. PA-A, Durden, 10:51-54 (emphasis added). It is understood from this disclosure that the second counter is stored in memory.

Claim 29 next recites and Durden discloses "*transmitting the value of the second counter to the server*." **Ex. PAT-A**, '565 Patent, 92:27 (emphasis added).

Durden discloses transmitting the data associated with the purchase.

> "Module 20 allows the subscriber to authorize his STT to receive a pay–per–view event, **store the data associated with the purchase of that event in memory 21**, and **transmit that stored data** to the cable operator via the telephone network 24."

Ex. PA-A, Durden, 6:57–61 (emphasis added). It is understood from this disclosure that the data associated with the purchase including "a value of the second counter" is transmitted to the billing computer.

x. <u>Claim 30</u>

Claim 30 should be rejected under 35 U.S.C. § 102(b) as unpatentable over Durden. Requestor provides a concise statement of the substantial new question of patentability for Claim 30 based on Durden under 35 U.S.C. § 102(b).

Please see attached Exhibit CC-A for a claim chart comparing Durden with Claim 30 of the '565 Patent under 35 U.S.C. § 102(b)

Claim 30 recites and Durden discloses *"[A] physical unit, comprising: means for monitoring a product for an occurrence in the product of a trigger event of a predefined plurality of trigger events*." **Ex. PAT-A**, '565 Patent, 92:28-31 (emphasis added).

Durden discloses a set-top terminal ("physical unit") for a cable television system.

> "Each subscriber in the addressable cable system is provided with **a set-top terminal (STT) 15** by the cable operator as schematically indicated in FIG. 1. STT 15 allows the subscriber to tune and descramble the services that he has requested from the cable system operator."

Ex. PA-A, Durden, 6:43-48 (emphasis added).

Durden discloses counting elapsed time ("monitoring … a trigger event") using a counter of the set-top terminal ("product").

> "Once the subscriber has tuned to a channel on which a IPPV event is being shown, **a counter counts down** until the free **time has elapsed**."

Id., 10:47-49 (emphasis added).

Durden discloses a plurality of counters ("means for monitoring") counting elapsed time on pay channels ("a predefined plurality of trigger events").

> "each subscriber module has **a plurality of counters** corresponding to the number of pay channels. A preferred embodiment includes sixteen counters."

Id., 10:51-54 (emphasis added).

Claim 30 next recites and Durden discloses "*means for incrementing a counter corresponding to the trigger event upon detection of the occurrence of the trigger event*." **Ex. PAT-A**, '565 Patent, 92:32-34 (emphasis added).

Durden discloses a security counter (*e.g.*, "counter") that allows a subscriber to view an IPPV programming as the time elapses ("detection of the occurrence of the trigger event").

> "**A security counter** controls the length of time that an impulse pay-per-view module will allow the cable TV subscriber to view an impulse pay-per-view channel without receiving an IPPV authorization transaction."

Ex. PA-A, Durden, 11:17-20 (emphasis added).

Durden discloses decrementing a counter in response to the counter that counts the elapsed time ("detection of the occurrence of the trigger event").

> "The memory cell stores the IPPV event free time which is periodically **stepped or decremented responsive to the counter** until free time has lapsed for the associated IPPV event channel and, the **stepping or decrementing occurs** only when the IPPV event on that channel is being displayed and only after preview time has expired."

Id., 10:60-66 (emphasis added). It is understood that a disclosure of decrementing a counter teaches incrementing the counter.

Durden also discloses decrementing a free time counter (*e.g.*, "counter") when the free time elapses ("trigger event").

> "The free time counter is then allowed to **count down or decrement** whenever the subscriber is tuned to that particular channel. The counter is **decremented** on the average every sixty seconds."

Id., 11:9-12 (emphasis added). It is understood that a disclosure of decrementing a counter teaches incrementing the counter.

Claim 30 next recites and Durden discloses "*means for probing for information regarding a use of the product if the counter exceeds a threshold*." **Ex. PAT-A**, '565 Patent, 92:35-36 (emphasis added).

Durden discloses that a programming guide ("means for probing information regarding a use of the product") is available for probing programming information when the counter has lapsed and before the counter has lapsed.

> "An improperly keyed access code denies one the ability to purchase programming. Once in the IPPV mode, depression of the "AU" key creates access to the pre-buy mode. Once in the pre-buy mode, the **subscriber simply enters the three or four digit event ID number of the program he wishes to purchase**. The ID numbers may be provided in **a programming guide**, for example."

Ex. PA-A, Durden, 12:5-12 (emphasis added). The time lapse ("if the counter exceeds a threshold") alters the display to close out the preview/free view of the pay-per-view event.

> "**When that length of time has elapsed**, the impulse pay-per-view module will deauthorize all impulse pay-per-view channels and "**close out" all impulse pay-per-view events that are in progress**."

Id., 11:21-24 (emphasis added).

Durden discloses a preview time and a free time ("information regarding a use of the product") of a pay-per-view event.

> "**Preview time** is defined as a period or window of time at the beginning of an event during which the event or a preview of a future event may be watched without being purchased. **Free time** is defined as a cumulative length of time during an event that the event may be watched without being purchased."

Id., 10:20-25 (emphasis added). Durden discloses an example of setting a preview time (*e.g.*, 8:00-8:30 pm) and a free time (*e.g.*, 8:30-8:34 pm, 9:10-9:15 pm, 9:45-9:50 pm) of a movie (8:00-10:00 pm).

> "For example, suppose the IPPV event consists of **a movie with a starting time of 8:00 p.m. and an ending time of 10:00 p.m**. The system operator may designate a block of time, say from **8:00-8:30**, during which the movie may be viewed without the viewer having to purchase the movie. This would constitute the **preview time**. The system operator may elect to permit additional viewing of the movie for a total of fourteen minutes during the event time. Thus, after the preview time has expired, a total of fourteen minutes of the event may be viewed. An example of how this **free time** may be used is from **8:30-8:34, 9:10-9:15, and 9:45-9:50**. There is no restriction on how the free time is used as long as it does

> not exceed its predetermined value, in this case, fourteen minutes."

Id., 10:29-43 (emphasis added). It is understood that the information regarding the preview time and free time is displayed on the channel being displayed on the subscriber's television terminal.

Durden discloses a predetermined value ("a threshold").

> "There is no restriction on how the free time is used as long as it does not exceed its **predetermined value**, in this case, fourteen minutes."

Id., 10:40-43 (emphasis added). Durden also discloses decrementing the counter to zero ("the counter exceeds a threshold").

> "When **the counter equals zero**, the event must be purchased to enable further viewing."

Id., 10:49-51 (emphasis added). Durden also discloses decrementing the counter until free time has lapsed ("the counter exceeds a threshold").

> "The memory cell stores the IPPV event free time which is periodically **stepped or decremented responsive to the counter until free time has lapsed** for the associated IPPV event channel and, the stepping or decrementing occurs only when the IPPV event on that channel is being displayed and only after preview time has expired."

Id., 10:60-66 (emphasis added). It is understood that decrementing a counter from a predetermined value teaches that the counter exceeds a threshold.

Durden discloses cutting off viewing or scrambling the channel ("probing for information regarding a use of the product") at the expiry of a free-viewing pay-per-view event ("if the counter exceeds a threshold").

> "If an event is both a pay-per-view event and an impulse pay-per-view event, as frequently happens, and a subscriber buys the event as a pay-per-view event, the microprocessor 22 in the IPPV module would normally **cut off viewing after the allocated free time had expired**."

Id., 12:44-48 (emphasis added).

Claim 30 next recites and Durden discloses "*means for storing an input received from the means for probing*." **Ex. PAT-A**, '565 Patent, 92:37-38 (emphasis added).

Durden discloses that an access code ("input") is entered by the subscriber.

> "They allow the Host 5 to authorize a subscriber for IPPV purchases and define the "**access code" that must be entered by the subscriber** in order to purchase an IPPV event."

Ex. PA-A, Durden, 7:19-22 (emphasis added).

Durden discloses that the subscriber enters the access code ("input") by depressing the keyboard keys of a hand-held remote control ("means for probing for information").

> "With the converter turned on, the subscriber depresses the keyboard keys "PRG" and "-" of his **hand-held remote control**. If **an access code** is required to purchase programming, **this must be entered** before the converter will enter the IPPV mode and display "VCR" using LED elements."

Id, 11:68-12:5 (emphasis added).

Durden also discloses that the event ID number ("input") associated with the purchased pay-per-view program is stored in the memory.

> "Once in the pre-buy mode, the subscriber simply **enters the three or four digit event ID number** of the program he wishes to purchase. The ID numbers may be provided in a programming guide, for example. **After the last digit of each program ID has been entered, it is stored in nonvolatile memory 21 of the module**."

Id, 12:8-14 (emphasis added). Durden also discloses that the IPPV module of the set-top terminal stores data (*e.g.*, access code and event ID number) associated with the purchase of the purchased pay-per-view program.

> "Module 20 allows the subscriber to authorize his STT to receive a pay-per-view event, **store the data associated with the purchase of that event in memory 21**, and transmit that **stored data** to the cable operator via the telephone network 24."

Id, 6:57-61 (emphasis added).

Claim 30 next recites and Durden discloses "*means for transmitting the input to a server*." **Ex. PAT-A**, '565 Patent, 92:39 (emphasis added).

Durden discloses transmitting the stored user input data (*e.g.*, access code and event ID number) to a cable operator ("server").

> "Module 20 allows the subscriber to authorize his STT to receive a pay-per-view event, store the **data associated with the purchase of that event** in memory 21, **and transmit that stored data to the cable operator via the telephone network 24**."

Ex. PA-A, Durden, 6:57-61 (emphasis added). Durden also discloses transmitting the record of PPV events (*e.g.*, access code and event ID number input) purchased by a subscriber to a system manager ("server").

> "This data is **transmitted to the system manager** by the IPPV module 20 via the telephone network 24 and contains **a record of which PPV events have been purchased by each subscriber**."

Id, 7:36-39 (emphasis added).

y. <u>Claim 31</u>

Claim 31 should be rejected under 35 U.S.C. § 102(b) as unpatentable over Durden. Requestor provides a concise statement of the substantial new question of patentability for Claim 31 based on Durden under 35 U.S.C. § 102(b).

Please see attached Exhibit CC-A for a claim chart comparing Durden with Claim 31 of the '565 Patent under 35 U.S.C. § 102(b)

Claim 31 recites and Durden discloses "*[t]he unit of claim 30*." **Ex. PAT-A**, '565 Patent, 92:40 (emphasis added). As shown in Section VII.A.1.x, Durden discloses the unit of claim 30.

Claim 31 next recites and Durden discloses "*means for monitoring the product for an occurrence in the product of a second trigger event of the predefined plurality of trigger events*." *Id.*, 92:41-43 (emphasis added).

Durden discloses counting elapsed time ("monitoring … a trigger event") using a counter of the set-top terminal ("product").

> "Once the subscriber has tuned to a channel on which a IPPV event is being shown, **a counter counts down** until the free **time has elapsed**."

Ex. PA-A, Durden, 10:47-49 (emphasis added).

Durden discloses counting elapsed time on each of the plurality of pay channels ("occurrence in the product of a second trigger event").

> "each subscriber module has **a plurality of counters** corresponding to the number of pay channels. A preferred embodiment includes sixteen counters."

Id., 10:51-54 (emphasis added).

Claim 31 next recites and Durden discloses "*means for incrementing a value of a second counter corresponding to the second trigger event upon detection of the occurrence of the second trigger event in the product*." **Ex. PAT-A**, '565 Patent, 92:44-46 (emphasis added).

Durden discloses a plurality of counters including "a second counter" that counts elapsed time on the corresponding pay channel ("occurrence of the second trigger event").

> "each subscriber module has **a plurality of counters corresponding to the number of pay channels**. A preferred embodiment includes sixteen counters."
>
> **Ex. PA-A**, Durden, 10:51-54 (emphasis added).

z. <u>Claim 32</u>

Claim 32 should be rejected under 35 U.S.C. § 102(b) as unpatentable over Durden. Requestor provides a concise statement of the substantial new question of patentability for Claim 32 based on Durden under 35 U.S.C. § 102(b).

Please see attached Exhibit CC-A for a claim chart comparing Durden with Claim 32 of the '565 Patent under 35 U.S.C. § 102(b)

Claim 32 recites and Durden discloses "*[t]he unit of claim 30 [sic]*." **Ex. PAT-A**, '565 Patent, 92:47 (emphasis added). As shown in Section VII.A.1.y, Durden discloses the unit of claim 31.

Claim 32 next recites and Durden discloses "*means for storing the second counter on the device*." *Id.*, 92:48 (emphasis added).

Durden discloses a plurality of counters including "a second counter."

> "each subscriber module has **a plurality of counters** corresponding to the number of pay channels. A preferred embodiment includes sixteen counters."

Ex. PA-A, Durden, 10:51-54 (emphasis added). It is understood from this disclosure that the second counter is stored in memory.

Claim 32 next recites and Durden discloses "*means for transmitting the value of the second counter to the server*." **Ex. PAT-A**, '565 Patent, 92:49-50 (emphasis added).

Durden discloses transmitting the data associated with the purchase.

> "Module 20 allows the subscriber to authorize his STT to receive a pay–per–view event, **store the data associated with the purchase of that event in memory 21**, and **transmit that stored data** to the cable operator via the telephone network 24."

Ex. PA-A, Durden, 6:57–61 (emphasis added). It is understood from this disclosure that the data associated with the purchase including "a value of the second counter" is transmitted to the billing computer.

2. <u>Anticipated By Kravette Under 35 U.S.C. § 102(e)</u>

a. <u>Claim 1</u>

Claim 1 should be rejected under 35 U.S.C. § 102(e) as unpatentable over Kravette. Requestor provides a concise statement of the substantial new question of patentability for Claim 1 based on Kravette under 35 U.S.C. § 102(e).

Please see attached Exhibit CC-B for a claim chart comparing Kravette with Claim 1 of the '565 Patent under 35 U.S.C. § 102(e)

Claim 1 recites and Kravette discloses *"[a] unit, comprising: a memory; a transmitter; and a processor*." **Ex. PAT-A**, '565 Patent, 90:14-17 (emphasis added).

Kravette discloses a computer control ("unit").

> **"Computer control 16** includes a monitoring central processing unit ("CPU") 24 which receives the count signal produced by counter 18 along a data bus 25."

Ex. PA-B, Kravette, 6:15-17 (emphasis added).

Kravette discloses that the computer control has a RAM ("memory").

> "Monitoring CPU 24 counts the number of count signals detected by storing a total count value in **a random access memory ("RAM") 28** which is incremented each time a count signal is received."

Id., 6:18-21 (emphasis added).

> "The diagnostic data of the photocopier may be stored, if required, in **RAM 29**, which can also store maintenance information, such as data related to recent service and data as to when certain copier parts were replaced."

Id., 9:14-18 (emphasis added).

Kravette discloses that the computer control has a dual asynchronous receiver/transmitter device ("transmitter").

> "In an exemplary embodiment serializer 22 is **a dual asynchronous receiver/transmitter device** which provides two channel asynchronous serial communication for interfacing with computer control 16 and modem 14."

Id., 8:65-9:1 (emphasis added). Kravette also discloses that computer control has a modem ("transmitter")

> "When ROM 32 has been triggered monitoring CPU 24 sends a signal through **modem 14** indicating that the predetermined number has been reached."

Id., 8:19-22 (emphasis added).

Kravette discloses that the computer control has a monitoring CPU ("processor").

> "**Computer control** 16 includes a monitoring central processing unit ("CPU") 24 which receives the count signal produced by counter 18 along a data bus 25. Monitoring CPU 24 counts the number of count signals detected by **storing a total count value in a random access memory ("RAM") 28** which is incremented each time a count signal is received. In an exemplary embodiment three RAMs 28 are provided. Monitoring CPU 24 controls where the respective total count values have been stored by assigning an address to each total count value. **Monitoring CPU** 24 may be a Hitachi 6305 **microprocessor**."

Id., 6:15-26 (emphasis added).

Claim 1 next recites and Kravette discloses "*a processor, coupled to the memory and to the transmitter*." **Ex. PAT-A**, '565 Patent, 90:17-18 (emphasis added).

Kravette discloses that the monitoring CPU ("processor") is coupled to a serializer ("transmitter").

> "In an exemplary embodiment **serializer 22** is **a dual asynchronous receiver/transmitter device** which provides two channel asynchronous serial communication for interfacing with computer control 16 and modem 14."

Ex. PA-B, Kravette, 8:65-9:1 (emphasis added).

Kravette discloses that the monitoring CPU ("processor") stores a total count value in the RAM ("memory").

> "**Monitoring CPU 24** counts the number of count signals detected by **storing a total count value in a random access memory ("RAM") 28** which is incremented each time a count signal is received. In an exemplary embodiment three RAMs 28 are provided. Monitoring CPU 24 controls where the respective total count values have been stored by assigning an address to each total count value. **Monitoring CPU** 24 may be a Hitachi 6305 **microprocessor**."

Id., 6:18-26 (emphasis added). Figure 1 illustrates that the monitoring CPU ("processor") is coupled to the RAM ("memory") and the serializer or modem ("transmitter").

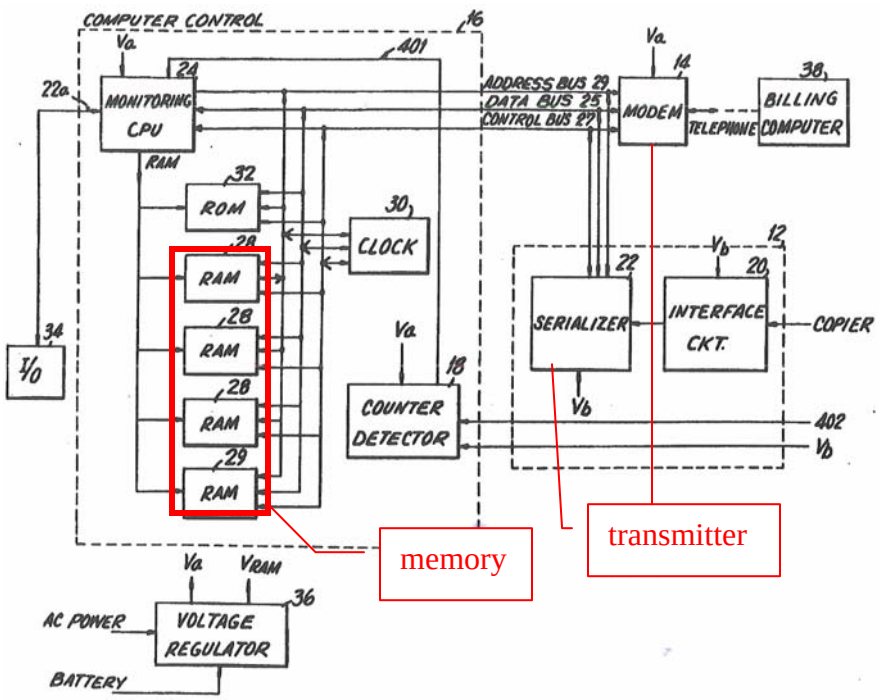

Id., Fig. 1.

Claim 1 next recites and Kravette discloses "*[the processor … configured to] monitor a product for an occurrence in the product of a trigger event of a predefined plurality of trigger events*." **Ex. PAT-A**, '565 Patent, 90:17-21 (emphasis added).

Kravette discloses a paper processing device/photocopier ("product").

> "A system for monitoring a variable output **paper processing device** is provided."

Ex. PA-B, Kravette, Abstract:1-2 (emphasis added).

Kravette discloses counting the number of papers ("monitoring .. a trigger event") occurring in the copier ("product").

> "A counter counts the **number of papers processed by the copier producing a count signal**. A monitoring system computer receives the count signal and increments **a count value** over a predetermined period."

Id., 2:56-60 (emphasis added).

Kravette also discloses a real time clock that measures elapsed time ("monitoring … a trigger event").

> "monitoring system CPU 102 generates an **internal real time clock** in a step 309."

Id., 15:62-63 (emphasis added).

Claim 1 next recites and Kravette discloses "*[the processor … configured to] increment a counter corresponding to the trigger event upon detection of the occurrence of the trigger event*." **Ex. PAT-A**, '565 Patent, 90:22-23 (emphasis added).

Kravette discloses a counter ("counter") that increments a counter value based on the number of papers ("trigger event").

> "**A counter counts the number of papers processed by the copier producing a count signal**. A monitoring system computer receives the count signal and **increments a count value** over a predetermined period."

Ex. PA-B, Kravette, 2:56-60 (emphasis added).

> "Each paper processing device has **an internal paper counter**, **this counter counts paper and produces an internal count signal 402 which increments the counter**."

Id., 5:19-21 (emphasis added).

Kravette also discloses that the real time clock counts the elapsed time using an internal real time clock ("counter").

> "monitoring system CPU 102 generates an **internal real time clock** in a step 309."

Id., 15:62-63 (emphasis added). From these disclosures, Kravette discloses a predefined plurality of trigger events (*e.g.*, counting the number of papers and measuring elapsed time).

Claim 1 next recites and Kravette discloses "*[the processor … configured to] cause the display of a user interface, configured to probe for information regarding a use of the product, if the counter exceeds a threshold*." **Ex. PAT-A**, '565 Patent, 90:24-26 (emphasis added).

Kravette discloses a display device ("user interface") that displays the photocopier's status ("information regarding a use of the product").

> "Generally, paper printing and processing devices, and in particular photocopiers, contain **a display device**, usually a liquid crystal, LED or other alpha-numeric display, **for visually displaying to the user the status of the devices**."

Ex. PA-B, Kravette, 4:38-42 (emphasis added). In particular, Kravette discloses that the display device ("user interface") has a readable counter for displaying the paper count value ("information regarding a use of the product").

> "The internally generated signals which drive the **display device** include diagnostic signals which cause the **photocopier display to display malfunctions within the photocopier or report maintenance requirements** such as toner and paper refill. A paper count signal drives the **display device**, in this case usually an internal, **readable counter to display a total paper count value corresponding to the number of sheets of paper processed by the photocopier**."

Id., 4:42-50 (emphasis added). Kravette also discloses that each copier ("product") has a visual display device ("user interface") for displaying diagnostic and monitoring signals ("information regarding a use of the product").

> "each copier contains an internal copier CPU for generating the **diagnostic and monitoring signals** which are displayed on **a visual display device**."

Id., 12:21-24 (emphasis added). It is understood that the paper count value and/or diagnostic and monitoring signals can be displayed on the display device when the counter counts or after the counter exceeds a threshold.

Kravette discloses determining when the count value reaches a predetermine count number ("counter exceeds a threshold").

> "ROM 32 contains a program for allowing monitoring CPU 24 to determine **when the count value generated by monitoring CPU 24 equals the predetermined count value** stored in a RAM 28. ROM 32 acts as a secondary clock allowing monitoring CPU 24 to **identify when a predetermined count number has been reached**. When ROM 32 has been triggered monitoring CPU 24 sends a signal through modem 14 indicating that the predetermined number has been reached."

Id., 8:13-22 (emphasis added).

Kravette also discloses determining when the time generated by the real time clock equals the predetermined time period ("counter exceeds a threshold").

> "Computer control 16 contains a ROM 32 which contains a program for allowing monitoring CPU 24 to determine when **the time generated by real time clock 30 equals the predetermined time period** stored in a designated RAM 28. When the two time periods match, monitoring system CPU 24 sends **a signal** through modem 14 to billing computer 38 **indicating that the predetermined time period has ended and forwards the total count value to the billing computer**."

Id., 7:67-8:8 (emphasis added).

Claim 1 next recites and Kravette discloses "*[the processor … configured to] cause the memory to store an input received from the user interface*." **Ex. PAT-A**, '565 Patent, 90:27-28 (emphasis added).

Kravette discloses that a service person enters data ("input") using the input/output device ("user interface").

> "This may be done **manually by reentering the updated identification data** base into an already existing billing system or by **directly inputting this information** into a billing software program for automatically generating a billing report upon the input of the updated count."

Ex. PA-B, Kravette, 7:11-16 (emphasis added).

Kravette also discloses that the input/output device is a part of the system ("product") and has an internal memory for storing an input received by the service person.

> "Each service person may be equipped with a portable hand held **input/output device 34** in the form of a keypad/display which may become part of the system through an auxiliary input 22a of monitoring CPU 24. In another embodiment it may be input through **an auxiliary input** external to interface 12. Input/output device 34 may also include **internal memory** (not shown)."

Id., 9:41-48 (emphasis added).

Claim 1 next recites and Kravette discloses "*[the processor … configured to] cause the transmitter to transmit the input to a server*." **Ex. PAT-A**, '565 Patent, 90:29 (emphasis added).

Kravette discloses that the service person's input is transmitted to the central station ("a server")

> "The service person at the job site may also **communicate with the central station through modem 14** by becoming part of system 10, through input/output device 34."

Ex. PA-B, Kravette, 9:49-52 (emphasis added).

b. <u>Claim 2</u>

Claim 2 should be rejected under 35 U.S.C. § 102(e) as unpatentable over Kravette. Requestor provides a concise statement of the substantial new question of patentability for Claim 2 based on Kravette under 35 U.S.C. § 102(e).

Please see attached Exhibit CC-B for a claim chart comparing Kravette with Claim 2 of the '565 Patent under 35 U.S.C. § 102(e)

Claim 2 recites "*[t]he unit of claim 1*." **Ex. PAT-A**, '565 Patent, 90:30 (emphasis added). As shown in Section VII.A.2.a, Kravette discloses the unit of claim 1.

Claim 2 next recites and Kravette discloses that "*the input reflects a request to schedule maintenance*." *Id.*, 90:30-31 (emphasis added).

Kravette discloses that the service person's input is transmitted to the central station ("a server")

> "The service person at the job site may also **communicate with the central station through modem 14** by becoming part of system 10, through input/output device 34."

Ex. PA-B, Kravette, 9:49-52 (emphasis added).

Kravette also discloses reporting maintenance requirement.

> "The internally generated signals which drive the display device include diagnostic signals which cause the photocopier display to display malfunctions within the photocopier or **report maintenance requirements** such as toner and paper refill."

Id., 4:42-46 (emphasis added).

c. <u>Claim 3</u>

Claim 3 should be rejected under 35 U.S.C. § 102(e) as unpatentable over Kravette. Requestor provides a concise statement of the substantial new question of patentability for Claim 3 based on Kravette under 35 U.S.C. § 102(e).

Please see attached Exhibit CC-B for a claim chart comparing Kravette with Claim 3 of the '565 Patent under 35 U.S.C. § 102(e)

Claim 3 recites "*[t]he unit of claim 1*." **Ex. PAT-A**, '565 Patent, 90:32 (emphasis added). As shown in Section VII.A.2.a, Kravette discloses the unit of claim 1.

Claim 3 next recites and Kravette discloses that "*the input reflects a submission of a purchase order*." *Id.*, 90:32-33 (emphasis added).

Kravette also discloses report of toner and paper refill ("purchase order").

> "The internally generated signals which drive the display device include diagnostic signals which cause the photocopier display to display malfunctions within the photocopier or **report maintenance requirements** such as toner and paper refill."

Ex. PA-B, Kravette, 4:42-46 (emphasis added).

d. <u>Claim 4</u>

Claim 4 should be rejected under 35 U.S.C. § 102(e) as unpatentable over Kravette. Requestor provides a concise statement of the substantial new question of patentability for Claim 4 based on Kravette under 35 U.S.C. § 102(e).

Please see attached Exhibit CC-B for a claim chart comparing Kravette with Claim 4 of the '565 Patent under 35 U.S.C. § 102(e)

Claim 4 recites "*[t]he unit of claim 1*." **Ex. PAT-A**, '565 Patent, 90:34 (emphasis added). As shown in Section VII.A.2.a, Kravette discloses the unit of claim 1.

Claim 4 next recites and Kravette discloses that "*the input reflects a request for interactive assistance*." *Id.*, 90:34-35 (emphasis added).

Kravette discloses that the service person communicates ("interactive assistance") with the central station ("a server")

> "The service person at the job site may also **communicate with the central station through modem 14** by becoming part of system 10, through input/output device 34."

Ex. PA-B, Kravette, 9:49-52 (emphasis added).

e. <u>Claim 5</u>

Claim 5 should be rejected under 35 U.S.C. § 102(e) as unpatentable over Kravette. Requestor provides a concise statement of the substantial new question of patentability for Claim 5 based on Kravette under 35 U.S.C. § 102(e).

Please see attached Exhibit CC-B for a claim chart comparing Kravette with Claim 5 of the '565 Patent under 35 U.S.C. § 102(e)

Claim 5 recites and Kravette discloses "*[t]he unit of claim 1*." **Ex. PAT-A**, '565 Patent, 90:36 (emphasis added). As shown in Section VII.A.2.a, Kravette discloses the unit of claim 1.

Claim 5 next recites and Kravette discloses that "*the processor is further configured to: monitor the product for an occurrence in the product of a second trigger event of the predefined plurality of trigger events*." *Id.*, 90:36-40 (emphasis added).

Kravette discloses monitoring internal real time clock ("a second trigger event").

> "…monitoring system CPU 102 generates an **internal real time clock** in a step 309."

Ex. PA-B, Kravette, 15:62-63 (emphasis added).

Claim 5 next recites and Kravette discloses that "[*the processor is further configured to:] increment a second counter corresponding to the second trigger event upon detection of the occurrence of the second trigger event in the product*." **Ex. PAT-A**, '565 Patent, 90:41-43 (emphasis added).

Kravette discloses incrementing the real time clock ("second counter") that counts the elapsed time corresponding to the internal real time clock ("occurrence of the second trigger event"). For example, the minute counter increments at every 60 counts of the second counter ("second trigger event").

> "…monitoring system CPU 102 generates an **internal real time clock** in a step 309."

Ex. PA-B, Kravette, 5:62-63 (emphasis added).

f. <u>Claim 6</u>

Claim 6 should be rejected under 35 U.S.C. § 102(e) as unpatentable over Kravette. Requestor provides a concise statement of the substantial new question of patentability for Claim 6 based on Kravette under 35 U.S.C. § 102(e).

Please see attached Exhibit CC-B for a claim chart comparing Kravette with Claim 6 of the '565 Patent under 35 U.S.C. § 102(e)

Claim 6 recites and Kravette discloses "*[t]he unit of claim 5*." **Ex. PAT-A**, '565 Patent, 90:44 (emphasis added). As shown in Section VII.A.2.e, Kravette discloses the unit of claim 5.

Claim 6 next recites and Kravette discloses that "*the processor is further configured to: cause the memory to store the second counter*." *Id.*, 90:44-46 (emphasis added).

Kravette discloses determining when the time generated by the real time clock ("second counter") equals the predetermined time period.

> "Computer control 16 contains a ROM 32 which contains a program for allowing monitoring CPU 24 to determine when **the time generated by real time clock 30 equals the predetermined time period** stored in a designated RAM 28. When the two time periods match, monitoring system CPU 24 sends **a signal** through modem 14 to billing computer 38 **indicating that the predetermined time period has ended and forwards the total count value to the billing computer**."

Ex. PA-B, Kravette, 7:67-8:8 (emphasis added). It is understood from this disclosure that the second counter is stored in memory.

Claim 6 next recites and Kravette discloses that "[*the processor is further configured to:] cause the transmitter to transmit a value of the second counter*." **Ex. PAT-A**, '565 Patent, 90:47-48 (emphasis added).

Kravette discloses sending a signal ("value of the second counter") to the billing computer. The signal indicates that the predetermined time period counted by the real time clock ("second counter") has ended.

> "Computer control 16 contains a ROM 32 which contains a program for allowing monitoring CPU 24 to determine when **the time generated by real time clock 30 equals the predetermined time period** stored in a designated RAM 28. When the two time periods match, monitoring system CPU 24 **sends a signal through modem 14 to billing computer 38 indicating that the predetermined time period has ended and forwards the total count value to the billing computer**."

Ex. PA-B, Kravette, 7:67-8:8 (emphasis added). It is understood from this disclosure that the signal sent to the billing computer contains the value of the real time clock ("second counter").

g. <u>Claim 8</u>

Claim 8 should be rejected under 35 U.S.C. § 102(e) as unpatentable over Kravette. Requestor provides a concise statement of the substantial new question of patentability for Claim 8 based on Kravette under 35 U.S.C. § 102(e).

Please see attached Exhibit CC-B for a claim chart comparing Kravette with Claim 8 of the '565 Patent under 35 U.S.C. § 102(e)

Claim 8 recites "*[t]he unit of claim 1*." **Ex. PAT-A**, '565 Patent, 90:53 (emphasis added). As shown in Section VII.A.2.a, Kravette discloses the unit of claim 1.

Claim 8 next recites and Kravette discloses that "*one of the predefined plurality of trigger events is a problem associated with the product*." *Id.*, 90:53-55 (emphasis added).

Kravette discloses detecting a malfunction of the photocopier ("problem associated with the product").

> "An interface circuit monitors the operation of the copier by monitoring the internal diagnostic signals of the copier as displayed on a photocopier display device associated with each copier and signals a central station **when a malfunction of the copier has occurred, indicating the nature of the problem** by translating the diagnostic signal and transmitting a translated diagnostic signal."

Ex. PA-B, Kravette, 2:60-67 (emphasis added).

h. <u>Claim 9</u>

Claim 9 should be rejected under 35 U.S.C. § 102(e) as unpatentable over Kravette. Requestor provides a concise statement of the substantial new question of patentability for Claim 9 based on Kravette under 35 U.S.C. § 102(e).

Please see attached Exhibit CC-B for a claim chart comparing Kravette with Claim 9 of the '565 Patent under 35 U.S.C. § 102(e)

Claim 9 recites "*[t]he method [sic] of claim 8*." **Ex. PAT-A**, '565 Patent, 90:56 (emphasis added). As shown in Section VII.A.2.g, Kravette discloses the unit of claim 8.

Claim 9 next recites and Kravette discloses that "*the problem is an equipment problem*." *Id.*, 90:56-57 (emphasis added).

Kravette discloses detecting a malfunction of the photocopier ("equipment problem").

> "An interface circuit monitors the operation of the copier by monitoring the internal diagnostic signals of the copier as displayed on a photocopier display device associated with each copier and signals a central station **when a**

> **malfunction of the copier has occurred, indicating the nature of the problem** by translating the diagnostic signal and transmitting a translated diagnostic signal."

Ex. PA-B, Kravette, 2:60-67 (emphasis added).

i. <u>Claim 10</u>

Claim 10 should be rejected under 35 U.S.C. § 102(e) as unpatentable over Kravette. Requestor provides a concise statement of the substantial new question of patentability for Claim 10 based on Kravette under 35 U.S.C. § 102(e).

Please see attached Exhibit CC-B for a claim chart comparing Kravette with Claim 10 of the '565 Patent under 35 U.S.C. § 102(e)

Claim 10 recites "*[t]he unit of claim 1*." **Ex. PAT-A**, '565 Patent, 90:58 (emphasis added). As shown in Section VII.A.2.a, Kravette discloses the unit of claim 1.

Claim 10 next recites and Kravette discloses that "*a trigger event of the predefined plurality of trigger events is a use of at least one product feature.*" *Id.*, 90:58-60 (emphasis added).

Kravette discloses counting the number of papers ("use of at least one product feature").

> "A counter counts the **number of papers processed by the copier producing a count signal**. A monitoring system computer receives the count signal and increments **a count value** over a predetermined period."

Ex. PA-B, Kravette, 2:56-60 (emphasis added). Kravette also discloses a real time clock that measures elapsed time ("use of at least one product feature").

> "…monitoring system CPU 102 generates an **internal real time clock** in a step 309."

Id., 15:62-63 (emphasis added).

j. Claim 11

Claim 11 should be rejected under 35 U.S.C. § 102(e) as unpatentable over Kravette. Requestor provides a concise statement of the substantial new question of patentability for Claim 11 based on Kravette under 35 U.S.C. § 102(e).

Please see attached Exhibit CC-B for a claim chart comparing Kravette with Claim 11 of the '565 Patent under 35 U.S.C. § 102(e)

Claim 11 recites "*[t]he method [sic] of claim 10*." **Ex. PAT-A**, '565 Patent, 90:61 (emphasis added). As shown in Section VII.A.2.i, Kravette discloses the unit of claim 10.

Claim 11 next recites and Kravette discloses that "*the at least one product feature is "undo"*." *Id.*, 90:61-62 (emphasis added).

Kravette discloses a paper processing device/photocopier ("product").

> "A system for monitoring a variable output **paper processing device** is provided."

Ex. PA-B, Kravette, Abstract:1-2 (emphasis added). It is understood that the paper processing device has an interface to cancel a current paper processing job (*e.g.*, "cancel" button on the user interface).

k. Claim 13

Claim 13 should be rejected under 35 U.S.C. § 102(e) as unpatentable over Kravette. Requestor provides a concise statement of the substantial new question of patentability for Claim 13 based on Kravette under 35 U.S.C. § 102(e).

Please see attached Exhibit CC-B for a claim chart comparing Kravette with Claim 13 of the '565 Patent under 35 U.S.C. § 102(e)

Claim 13 recites "*[t]he unit of claim 1*." **Ex. PAT-A**, '565 Patent, 90:65 (emphasis added). As shown in Section VII.A.2.a, Kravette discloses the unit of claim 1.

Claim 13 next recites and Kravette discloses that "*a cellular telephone*." *Id.*, 90:65-66 (emphasis added).

Kravette discloses a telephone modem ("telephone") for providing serial communication.

> "In an exemplary embodiment serializer 22 is a dual asynchronous receiver/transmitter device which provides two channel asynchronous serial communication for interfacing with computer control 16 and **modem 14**."

Ex. PA-B, Kravette, 8:65-9:1 (emphasis added). It is understood that the photocopier ("product") can have a cellular telephone for the serial communication.

l. <u>Claim 14</u>

Claim 14 should be rejected under 35 U.S.C. § 102(e) as unpatentable over Kravette. Requestor provides a concise statement of the substantial new question of patentability for Claim 14 based on Kravette under 35 U.S.C. § 102(e).

Please see attached Exhibit CC-B for a claim chart comparing Kravette with Claim 14 of the '565 Patent under 35 U.S.C. § 102(e)

Claim 14 recites "*[t]he unit of claim 1*." **Ex. PAT-A**, '565 Patent, 91:1 (emphasis added). As shown in Section VII.A.2.a, Kravette discloses the unit of claim 1.

Claim 14 next recites and Kravette discloses that "*the processor is further configured to increment the counter corresponding to the trigger event upon detection of a second occurrence of the trigger event*." *Id.*, 91:1-4 (emphasis added).

Kravette discloses a secondary clock for identifying when ("a second occurrence") a predetermined count number ("occurrence of the trigger event") has been reached.

> "ROM 32 acts as **a secondary clock allowing monitoring CPU 24 to identify when a predetermined count number has been reached**. When ROM 32 has

been triggered monitoring CPU 24 sends a signal through modem 14 indicating that the predetermined number has been reached."

Ex. PA-B, Kravette, 8:17-22 (emphasis added).

m. <u>Claim 15</u>

Claim 15 should be rejected under 35 U.S.C. § 102(e) as unpatentable over Kravette. Requestor provides a concise statement of the substantial new question of patentability for Claim 15 based on Kravette under 35 U.S.C. § 102(e).

Please see attached Exhibit CC-B for a claim chart comparing Kravette with Claim 15 of the '565 Patent under 35 U.S.C. § 102(e)

Claim 15 recites and Kravette discloses *"[A] method, comprising: monitoring a product for an occurrence in the product of a trigger event of a predefined plurality of trigger events*."

Ex. PAT-A, '565 Patent, 91:5-7 (emphasis added).

Kravette discloses a paper processing device/photocopier ("product").

"A system for monitoring a variable output **paper processing device** is provided."

Ex. PA-B, Kravette, Abstract:1-2 (emphasis added).

Kravette discloses counting the number of papers ("monitoring .. a trigger event") occurring in the copier ("product").

"A counter counts the **number of papers processed by the copier producing a count signal**. A monitoring system computer receives the count signal and increments **a count value** over a predetermined period."

Id., 2:56-60 (emphasis added).

Kravette also discloses a real time clock that measures elapsed time ("monitoring … a trigger event").

"monitoring system CPU 102 generates an **internal real time clock** in a step 309."

Id., 15:62-63 (emphasis added). From these disclosures, Kravette discloses a predefined plurality of trigger events (*e.g.*, counting the number of papers and measuring elapsed time).

Claim 15 next recites and Kravette discloses "*incrementing a counter corresponding to the trigger event upon detection of the occurrence of the trigger event in the product*." **Ex. PAT-A**, '565 Patent, 91:8-10 (emphasis added).

Kravette discloses a counter ("counter") that increments a counter value based on the number of papers ("trigger event").

> "**A counter counts the number of papers processed by the copier producing a count signal**. A monitoring system computer receives the count signal and **increments a count value** over a predetermined period."

Ex. PA-B, Kravette, 2:56-60 (emphasis added).

> "Each paper processing device has **an internal paper counter**, **this counter counts paper and produces an internal count signal 402 which increments the counter**."

Id., 5:19-21 (emphasis added).

Kravette also discloses that the real time clock counts the elapsed time using an internal real time clock ("counter").

> "monitoring system CPU 102 generates an **internal real time clock** in a step 309."

Id., 15:62-63 (emphasis added).

Claim 15 next recites and Kravette discloses "*displaying a user interface, configured to probe for information regarding a use of the product, if the counter exceeds a threshold*." **Ex. PAT-A**, '565 Patent, 91:11-13 (emphasis added).

Kravette discloses a display device ("user interface") that displays the photocopier's status ("information regarding a use of the product").

> "Generally, paper printing and processing devices, and in particular photocopiers, contain **a display device**, usually a liquid crystal, LED or other alpha-numeric

display, **for visually displaying to the user the status of the devices**."

Ex. PA-B, Kravette, 4:38-42 (emphasis added). In particular, Kravette discloses that the display device ("user interface") has a readable counter for displaying the paper count value ("information regarding a use of the product").

> "The internally generated signals which drive the **display device** include diagnostic signals which cause the **photocopier display to display malfunctions within the photocopier or report maintenance requirements** such as toner and paper refill. A paper count signal drives the **display device**, in this case usually an internal, **readable counter to display a total paper count value corresponding to the number of sheets of paper processed by the photocopier**."

Id., 4:42-50 (emphasis added). Kravette also discloses that each copier ("product") has a visual display device ("user interface") for displaying diagnostic and monitoring signals ("information regarding a use of the product").

> "each copier contains an internal copier CPU for generating the **diagnostic and monitoring signals** which are displayed on **a visual display device**."

Id., 12:21-24 (emphasis added). It is understood that the paper count value and/or diagnostic and monitoring signals can be displayed on the display device when the counter counts or after the counter exceeds a threshold.

Kravette discloses determining when the count value reaches a predetermine count number ("counter exceeds a threshold").

> "ROM 32 contains a program for allowing monitoring CPU 24 to determine **when the count value generated by monitoring CPU 24 equals the predetermined count value** stored in a RAM 28. ROM 32 acts as a secondary clock allowing monitoring CPU 24 to **identify when a predetermined count number has been reached**. When ROM 32 has been triggered monitoring CPU 24 sends a signal through modem 14 indicating that the predetermined number has been reached."

Id., 8:13-22 (emphasis added).

Kravette also discloses determining when the time generated by the real time clock equals the predetermined time period ("counter exceeds a threshold").

> "Computer control 16 contains a ROM 32 which contains a program for allowing monitoring CPU 24 to determine when **the time generated by real time clock 30 equals the predetermined time period** stored in a designated RAM 28. When the two time periods match, monitoring system CPU 24 sends **a signal** through modem 14 to billing computer 38 **indicating that the predetermined time period has ended and forwards the total count value to the billing computer**."

Id., 7:67-8:8 (emphasis added).

Claim 15 next recites and Kravette discloses "*storing an input received from the user interface on a device*." **Ex. PAT-A**, '565 Patent, 91:14-15 (emphasis added).

Kravette discloses that a service person enters data ("input") using the input/output device ("user interface").

> "This may be done **manually by reentering the updated identification data** base into an already existing billing system or by **directly inputting this information** into a billing software program for automatically generating a billing report upon the input of the updated count."

Ex. PA-B, Kravette, 7:11-16 (emphasis added).

Kravette also discloses that the input/output device is a part of the system ("product") and has an internal memory for storing an input received by the service person.

> "Each service person may be equipped with a portable hand held **input/output device 34** in the form of a keypad/display which may become part of the system through an auxiliary input 22a of monitoring CPU 24. In another embodiment it may be input through **an auxiliary input** external to interface 12. Input/output device 34 may also include **internal memory** (not shown)."

Id., 9:41-48 (emphasis added).

Claim 15 next recites and Kravette discloses "*transmitting the input to a server*." **Ex. PAT-A**, '565 Patent, 91:16 (emphasis added).

Kravette discloses that the service person's input is transmitted to the central station ("a server")

> "The service person at the job site may also **communicate with the central station through modem 14** by becoming part of system 10, through input/output device 34."

Ex. PA-B, Kravette, 9:49-52 (emphasis added).

n. <u>Claim 17</u>

Claim 17 should be rejected under 35 U.S.C. § 102(e) as unpatentable over Kravette. Requestor provides a concise statement of the substantial new question of patentability for Claim 17 based on Kravette under 35 U.S.C. § 102(e).

Please see attached Exhibit CC-B for a claim chart comparing Kravette with Claim 17 of the '565 Patent under 35 U.S.C. § 102(e)

Claim 17 recites and Kravette discloses "*[t]he method of claim 15*." **Ex. PAT-A**, '565 Patent, 91:20 (emphasis added). As shown in Section VII.A.2.m, Kravette discloses the method of claim 15.

Claim 17 next recites and Kravette discloses "*monitoring the product for an occurrence in the product of a second trigger event of the predefined plurality of trigger events*." *Id.*, 91:21-23 (emphasis added).

Kravette discloses monitoring internal real time clock ("a second trigger event").

> "…monitoring system CPU 102 generates an **internal real time clock** in a step 309."

Ex. PA-B, Kravette, 15:62-63 (emphasis added).

Claim 17 next recites and Kravette discloses that "*incrementing a value of a second counter corresponding to the second trigger event upon detection of the second trigger event in the product*." **Ex. PAT-A**, '565 Patent, 91:24-26 (emphasis added).

Kravette discloses incrementing the real time clock ("second counter") that counts the elapsed time corresponding to the internal real time clock ("occurrence of the second trigger event"). For example, the minute counter increments at every 60 counts of the second counter ("second trigger event").

> "…monitoring system CPU 102 generates an **internal real time clock** in a step 309."

Ex. PA-B, Kravette, 5:62-63 (emphasis added).

o. <u>Claim 18</u>

Claim 18 should be rejected under 35 U.S.C. § 102(e) as unpatentable over Kravette. Requestor provides a concise statement of the substantial new question of patentability for Claim 18 based on Kravette under 35 U.S.C. § 102(e).

Please see attached Exhibit CC-B for a claim chart comparing Kravette with Claim 18 of the '565 Patent under 35 U.S.C. § 102(e)

Claim 18 recites and Kravette discloses "*[t]he method of claim 17*." **Ex. PAT-A**, '565 Patent, 91:27 (emphasis added). As shown in Section VII.A.2.n, Kravette discloses the method of claim 17.

Claim 18 next recites and Kravette discloses that "*storing the second counter on the device*." *Id.*, 91:28 (emphasis added).

Kravette discloses determining when the time generated by the real time clock ("second counter") equals the predetermined time period.

> "Computer control 16 contains a ROM 32 which contains a program for allowing monitoring CPU 24 to determine when **the time generated by real time clock 30 equals the predetermined time period** stored in a designated RAM 28. When the two time periods match, monitoring system CPU 24 sends **a signal** through modem 14 to billing computer 38 **indicating that the predetermined time period has ended and forwards the total count value to the billing computer**."

Ex. PA-B, Kravette, 7:67-8:8 (emphasis added). It is understood from this disclosure that the second counter is stored in memory.

Claim 18 next recites and Kravette discloses "*transmitting a value of the second counter to the server*." **Ex. PAT-A**, '565 Patent, 91:29 (emphasis added).

Kravette discloses sending a signal ("value of the second counter") to the billing computer. The signal indicates that the predetermined time period counted by the real time clock ("second counter") has ended.

> "Computer control 16 contains a ROM 32 which contains a program for allowing monitoring CPU 24 to determine when **the time generated by real time clock 30 equals the predetermined time period** stored in a designated RAM 28. When the two time periods match, monitoring system CPU 24 **sends a signal through modem 14 to billing computer 38 indicating that the predetermined time period has ended and forwards the total count value to the billing computer**."

Ex. PA-B, Kravette, 7:67-8:8 (emphasis added). It is understood from this disclosure that the signal sent to the billing computer contains the value of the real time clock ("second counter").

p. <u>Claim 19</u>

Claim 19 should be rejected under 35 U.S.C. § 102(e) as unpatentable over Kravette. Requestor provides a concise statement of the substantial new question of patentability for Claim 19 based on Kravette under 35 U.S.C. § 102(e).

Please see attached Exhibit CC-B for a claim chart comparing Kravette with Claim 19 of the '565 Patent under 35 U.S.C. § 102(e)

Claim 19 recites "*[t]he method of claim 15*." **Ex. PAT-A**, '565 Patent, 91:30 (emphasis added). As shown in Section VII.A.2.m, Kravette discloses the method of claim 15.

Claim 19 next recites and Kravette discloses that "*one of the predefined plurality of trigger events is a problem associated with the product*." *Id.*, 91:30-32 (emphasis added).

Kravette discloses detecting a malfunction of the photocopier ("problem associated with the product").

> "An interface circuit monitors the operation of the copier by monitoring the internal diagnostic signals of the copier as displayed on a photocopier display device associated with each copier and signals a central station **when a malfunction of the copier has occurred, indicating the nature of the problem** by translating the diagnostic signal and transmitting a translated diagnostic

signal."

Ex. PA-B, Kravette, 2:60-67 (emphasis added).

q. <u>Claim 21</u>

Claim 21 should be rejected under 35 U.S.C. § 102(e) as unpatentable over Kravette. Requestor provides a concise statement of the substantial new question of patentability for Claim 21 based on Kravette under 35 U.S.C. § 102(e).

Please see attached Exhibit CC-B for a claim chart comparing Kravette with Claim 21 of the '565 Patent under 35 U.S.C. § 102(e)

Claim 21 recites "*[t]he method of claim 19*." **Ex. PAT-A**, '565 Patent, 91:36 (emphasis added). As shown in Section VII.A.2.p, Kravette discloses the method of claim 19.

Claim 21 next recites and Kravette discloses that "*the problem is an equipment problem*." *Id.*, 91:36-37 (emphasis added).

Kravette discloses detecting a malfunction of the photocopier ("equipment problem").

> "An interface circuit monitors the operation of the copier by monitoring the internal diagnostic signals of the copier as displayed on a photocopier display device associated with each copier and signals a central station **when a malfunction of the copier has occurred, indicating the nature of the problem** by translating the diagnostic signal and transmitting a translated diagnostic signal."

Ex. PA-B, Kravette, 2:60-67 (emphasis added).

r. <u>Claim 22</u>

Claim 22 should be rejected under 35 U.S.C. § 102(e) as unpatentable over Kravette. Requestor provides a concise statement of the substantial new question of patentability for Claim 22 based on Kravette under 35 U.S.C. § 102(e).

Please see attached Exhibit CC-B for a claim chart comparing Kravette with Claim 22 of the '565 Patent under 35 U.S.C. § 102(e)

Claim 22 recites "*[t]he method of claim 15*." **Ex. PAT-A**, '565 Patent, 91:39 (emphasis added). As shown in Section VII.A.2.m, Kravette discloses the method of claim 15.

Claim 22 next recites and Kravette discloses that "*one of the predefined plurality of trigger events is a use of at least one product feature*." *Id.*, 91:39-41 (emphasis added).

Kravette discloses counting the number of papers ("use of at least one product feature").

> "A counter counts the **number of papers processed by the copier producing a count signal**. A monitoring system computer receives the count signal and increments **a count value** over a predetermined period."

Ex. PA-B, Kravette, 2:56-60 (emphasis added). Kravette also discloses a real time clock that measures elapsed time ("use of at least one product feature").

> "…monitoring system CPU 102 generates an **internal real time clock** in a step 309."

Id., 15:62-63 (emphasis added).

s. <u>Claim 25</u>

Claim 25 should be rejected under 35 U.S.C. § 102(e) as unpatentable over Kravette. Requestor provides a concise statement of the substantial new question of patentability for Claim 25 based on Kravette under 35 U.S.C. § 102(e).

Please see attached Exhibit CC-B for a claim chart comparing Kravette with Claim 25 of the '565 Patent under 35 U.S.C. § 102(e)

Claim 25 recites "*[t]he method of claim 15*." **Ex. PAT-A**, '565 Patent, 91:46 (emphasis added). As shown in Section VII.A.2.m, Kravette discloses the method of claim 15.

Claim 25 next recites and Kravette discloses that "*the product is a cellular telephone*." *Id.*, 91:46-47 (emphasis added).

Kravette discloses a telephone modem ("telephone") for serial communication.

> "In an exemplary embodiment serializer 22 is a dual asynchronous receiver/transmitter device which provides two channel asynchronous serial communication for interfacing with computer control 16 and **modem 14**."

Ex. PA-B, Kravette, 8:65-9:1 (emphasis added). It is understood that the photocopier ("product") can have a cellular telephone for the serial communication.

t. <u>Claim 26</u>

Claim 26 should be rejected under 35 U.S.C. § 102(e) as unpatentable over Kravette. Requestor provides a concise statement of the substantial new question of patentability for Claim 26 based on Kravette under 35 U.S.C. § 102(e).

Please see attached Exhibit CC-B for a claim chart comparing Kravette with Claim 26 of the '565 Patent under 35 U.S.C. § 102(e)

Claim 26 recites "*[t]he method of claim 15*." **Ex. PAT-A**, '565 Patent, 91:48 (emphasis added). As shown in Section VII.A.2.m, Kravette discloses the method of claim 15.

Claim 26 next recites and Kravette discloses "*further comprising: incrementing the counter corresponding to the trigger event upon detection of a second occurrence of the trigger event in the product*." *Id.*, 91:48-51 (emphasis added).

Kravette discloses a secondary clock for identifying when ("a second occurrence") a predetermined count number ("occurrence of the trigger event") has been reached.

> "ROM 32 acts as **a secondary clock allowing monitoring CPU 24 to identify when a predetermined count number has been reached**. When ROM 32 has been triggered monitoring CPU 24 sends a signal through modem 14 indicating that the predetermined number has been reached."

Ex. PA-B, Kravette, 8:17-22 (emphasis added).

u. <u>Claim 27</u>

Claim 27 should be rejected under 35 U.S.C. § 102(e) as unpatentable over Kravette. Requestor provides a concise statement of the substantial new question of patentability for Claim 27 based on Kravette under 35 U.S.C. § 102(e).

Please see attached Exhibit CC-B for a claim chart comparing Kravette with Claim 27 of the '565 Patent under 35 U.S.C. § 102(e)

Claim 27 recites and Kravette discloses "*[a] tangible computer readable medium having stored thereon, computer executable instructions that, if executed by a computing device, cause the computing device to perform a method*." **Ex. PAT-A**, '565 Patent, 92:1-4 (emphasis added).

Kravette discloses a computer control ("computing device").

> "**Computer control 16** includes a monitoring central processing unit ("CPU") 24 which receives the count signal produced by counter 18 along a data bus 25."

Id, 6:15-17 (emphasis added).

Kravette discloses a ROM ("tangible computer readable medium") storing a program.

> "To indicate the appropriate intervals at which preventive maintenance should occur, **ROM 32 contains a program** for allowing monitoring CPU 24 to determine when the count value generated by monitoring CPU 24 equals the predetermined count value stored in a RAM 28."

Id, 8:12-17 (emphasis added).

Kravette discloses that an interchangeable EPROM ("tangible computer readable medium") contains a software that determines how the monitoring CPU ("computing device") process data.

> "**An interchangeable EPROM 108** provides software for controlling the function of monitoring CPU and RAM 102. Monitoring CPU and RAM 102 reads programs from EPROM 108. **The software contained in EPROM 108 determines how the monitoring CPU and RAM 102 processes the data** received and stored in RAM and the flags stored in RAM. EPROM 108 may also contain programs for controlling the processing of the output from meter/counter

monitor 100."

Id, 13:22-30(emphasis added).

Claim 27 next recites and Kravette discloses "*monitoring a product for an occurrence in the product of a trigger event of a predefined plurality of trigger events.*" **Ex. PAT-A**, '565 Patent, 92:5-6 (emphasis added).

Kravette discloses a paper processing device/photocopier ("product").

> "A system for monitoring a variable output **paper processing device** is provided."

Ex. PA-B, Kravette, Abstract:1-2 (emphasis added).

Kravette discloses counting the number of papers ("monitoring .. a trigger event") occurring in the copier ("product").

> "A counter counts the **number of papers processed by the copier producing a count signal**. A monitoring system computer receives the count signal and increments **a count value** over a predetermined period."

Id., 2:56-60 (emphasis added).

Kravette also discloses a real time clock that measures elapsed time ("monitoring … a trigger event").

> "monitoring system CPU 102 generates an **internal real time clock** in a step 309."

Id., 15:62-63 (emphasis added). From these disclosures, Kravette discloses a predefined plurality of trigger events (*e.g.*, counting the number of papers and measuring elapsed time).

Claim 27 next recites and Kravette discloses "*incrementing a counter corresponding to the trigger event upon detection of the occurrence of the trigger event in the product.*" **Ex. PAT-A**, '565 Patent, 92:7-9 (emphasis added).

Kravette discloses a counter ("counter") that increments a counter value based on the number of papers ("trigger event").

> "**A counter counts the number of papers processed by the copier producing a count signal**. A monitoring system computer receives the count signal and **increments a count value** over a predetermined period."

Ex. PA-B, Kravette, 2:56-60 (emphasis added).

> "Each paper processing device has **an internal paper counter**, **this counter counts paper and produces an internal count signal 402 which increments the counter**."

Id., 5:19-21 (emphasis added).

Kravette also discloses that the real time clock counts the elapsed time using an internal real time clock ("counter").

> "monitoring system CPU 102 generates an **internal real time clock** in a step 309."

Id., 15:62-63 (emphasis added).

Claim 27 next recites and Kravette discloses "*displaying a user interface, configured to probe for information regarding a use of the product, if the counter exceeds a threshold*."

Ex. PAT-A, '565 Patent, 92:10-12 (emphasis added).

Kravette discloses a display device ("user interface") that displays the photocopier's status ("information regarding a use of the product").

> "Generally, paper printing and processing devices, and in particular photocopiers, contain **a display device**, usually a liquid crystal, LED or other alpha-numeric display, **for visually displaying to the user the status of the devices**."

Ex. PA-B, Kravette, 4:38-42 (emphasis added). In particular, Kravette discloses that the display device ("user interface") has a readable counter for displaying the paper count value ("information regarding a use of the product").

> "The internally generated signals which drive the **display device** include diagnostic signals which cause the **photocopier display to display malfunctions within the photocopier or report maintenance requirements** such as toner and paper refill. A paper count signal drives the **display device**, in this case usually an internal, **readable counter to display a total paper count value corresponding to the number of sheets of paper processed by the photocopier**."

Id., 4:42-50 (emphasis added). Kravette also discloses that each copier ("product") has a visual display device ("user interface") for displaying diagnostic and monitoring signals ("information regarding a use of the product").

> "each copier contains an internal copier CPU for generating the **diagnostic and monitoring signals** which are displayed on **a visual display device**."

Id., 12:21-24 (emphasis added). It is understood that the paper count value and/or diagnostic and monitoring signals can be displayed on the display device when the counter counts or after the counter exceeds a threshold.

Kravette discloses determining when the count value reaches a predetermine count number ("counter exceeds a threshold").

> "ROM 32 contains a program for allowing monitoring CPU 24 to determine **when the count value generated by monitoring CPU 24 equals the predetermined count value** stored in a RAM 28. ROM 32 acts as a secondary clock allowing monitoring CPU 24 to **identify when a predetermined count number has been reached**. When ROM 32 has been triggered monitoring CPU 24 sends a signal through modem 14 indicating that the predetermined number has been reached."

Id., 8:13-22 (emphasis added).

Kravette also discloses determining when the time generated by the real time clock equals the predetermined time period ("counter exceeds a threshold").

> "Computer control 16 contains a ROM 32 which contains a program for allowing monitoring CPU 24 to determine when **the time generated by real time clock 30 equals the predetermined time period** stored in a designated RAM 28. When the two time periods match, monitoring system CPU 24 sends **a signal** through modem 14 to billing computer 38 **indicating that the predetermined time period has ended and forwards the total count value to the billing computer**."

Id., 7:67-8:8 (emphasis added).

Claim 27 next recites and Kravette discloses "*storing an input received from the user interface on a device*." **Ex. PAT-A**, '565 Patent, 92:13-14 (emphasis added).

Kravette discloses that a service person enters data ("input") using the input/output device ("user interface").

> "This may be done **manually by reentering the updated identification data** base into an already existing billing system or by **directly inputting this information** into a billing software program for automatically generating a billing report upon the input of the updated count."

Ex. PA-B, Kravette, 7:11-16 (emphasis added).

Kravette also discloses that the input/output device is a part of the system ("product") and has an internal memory for storing an input received by the service person.

> "Each service person may be equipped with a portable hand held **input/output device 34** in the form of a keypad/display which may become part of the system through an auxiliary input 22a of monitoring CPU 24. In another embodiment it may be input through **an auxiliary input** external to interface 12. Input/output device 34 may also include **internal memory** (not shown)."

Id., 9:41-48 (emphasis added).

Claim 27 next recites and Kravette discloses "*transmitting the input to a server*." **Ex. PAT-A**, '565 Patent, 92:15 (emphasis added).

Kravette discloses that the service person's input is transmitted to the central station ("a server")

> "The service person at the job site may also **communicate with the central station through modem 14** by becoming part of system 10, through input/output device 34."

Ex. PA-B, Kravette, 9:49-52 (emphasis added).

v. <u>Claim 28</u>

Claim 28 should be rejected under 35 U.S.C. § 102(e) as unpatentable over Kravette. Requestor provides a concise statement of the substantial new question of patentability for Claim 28 based on Kravette under 35 U.S.C. § 102(e).

Please see attached Exhibit CC-B for a claim chart comparing Kravette with Claim 28 of the '565 Patent under 35 U.S.C. § 102(e)

Claim 28 recites and Kravette discloses "*[t]he tangible computer readable medium of claim 27*." **Ex. PAT-A**, '565 Patent, 92:16 (emphasis added). As shown in Section VII.A.2.u, Kravette discloses the tangible computer readable medium of claim 27.

Claim 28 next recites and Kravette discloses that "*the monitoring further includes: monitoring the product for an occurrence in the product of a second trigger event of the predefined plurality of trigger events*." *Id.*, 92:17-20 (emphasis added).

Kravette discloses monitoring internal real time clock ("a second trigger event").

> "…monitoring system CPU 102 generates an **internal real time clock** in a step 309."

Ex. PA-B, Kravette, 15:62-63 (emphasis added).

Claim 28 next recites and Kravette discloses "*incrementing a value of a second counter corresponding to the second trigger event upon detection of the occurrence of the second trigger event in the product*." **Ex. PAT-A**, '565 Patent, 92:21-23 (emphasis added).

Kravette discloses incrementing the real time clock ("second counter") that counts the elapsed time corresponding to the internal real time clock ("occurrence of the second trigger event"). For example, the minute counter increments at every 60 counts of the second counter ("second trigger event").

> "…monitoring system CPU 102 generates an **internal real time clock** in a step 309."

Ex. PA-B, Kravette, 5:62-63 (emphasis added).

w. <u>Claim 29</u>

Claim 29 should be rejected under 35 U.S.C. § 102(e) as unpatentable over Kravette. Requestor provides a concise statement of the substantial new question of patentability for Claim 29 based on Kravette under 35 U.S.C. § 102(e).

Please see attached Exhibit CC-B for a claim chart comparing Kravette with Claim 29 of the '565 Patent under 35 U.S.C. § 102(e)

Claim 29 recites and Kravette discloses "*[t]he tangible computer readable medium of claim 27 [sic]*." **Ex. PAT-A**, '565 Patent, 92:24 (emphasis added). As shown in Section VII.A.2.v, Kravette discloses the tangible computer readable medium of claim 28.

Claim 29 next recites and Kravette discloses that "*storing the second counter on the device*." *Id.*, 92:25-26 (emphasis added).

Kravette discloses determining when the time generated by the real time clock ("second counter") equals the predetermined time period.

> "Computer control 16 contains a ROM 32 which contains a program for allowing monitoring CPU 24 to determine when **the time generated by real time clock 30 equals the predetermined time period** stored in a designated RAM 28. When the two time periods match, monitoring system CPU 24 sends **a signal** through modem 14 to billing computer 38 **indicating that the predetermined time period has ended and forwards the total count value to the billing computer**."

Ex. PA-B, Kravette, 7:67-8:8 (emphasis added). It is understood from this disclosure that the second counter is stored in memory.

Claim 29 next recites and Kravette discloses "*transmitting the value of the second counter to the server*." **Ex. PAT-A**, '565 Patent, 92:27 (emphasis added).

Kravette discloses sending a signal ("value of the second counter") to the billing computer. The signal indicates that the predetermined time period counted by the real time clock ("second counter") has ended.

> "Computer control 16 contains a ROM 32 which contains a program for allowing monitoring CPU 24 to determine when **the time generated by real time clock 30 equals the predetermined time period** stored in a designated RAM 28. When the two time periods match, monitoring system CPU 24 **sends a signal through modem 14 to billing computer 38 indicating that the predetermined time period has ended and forwards the total count value to the billing computer**."

Ex. PA-B, Kravette, 7:67-8:8 (emphasis added). It is understood from this disclosure that the signal sent to the billing computer contains the value of the real time clock ("second counter").

x. <u>Claim 30</u>

Claim 30 should be rejected under 35 U.S.C. § 102(e) as unpatentable over Kravette. Requestor provides a concise statement of the substantial new question of patentability for Claim 30 based on Kravette under 35 U.S.C. § 102(e).

Please see attached Exhibit CC-B for a claim chart comparing Kravette with Claim 30 of the '565 Patent under 35 U.S.C. § 102(e)

Claim 30 recites and Kravette discloses *"[A] physical unit, comprising: means for monitoring a product for an occurrence in the product of a trigger event of a predefined plurality of trigger events*." **Ex. PAT-A**, '565 Patent, 92:28-31 (emphasis added).

Kravette discloses a paper processing device/photocopier ("product").

> "A system for monitoring a variable output **paper processing device** is provided."

Ex. PA-B, Kravette, Abstract:1-2 (emphasis added).

Kravette discloses counting the number of papers ("monitoring .. a trigger event") occurring in the copier ("product").

> "A counter counts the **number of papers processed by the copier producing a count signal**. A monitoring system computer receives the count signal and increments **a count value** over a predetermined period."

Id., 2:56-60 (emphasis added).

Kravette also discloses a real time clock that measures elapsed time ("monitoring … a trigger event").

> "monitoring system CPU 102 generates an **internal real time clock** in a step 309."

Id., 15:62-63 (emphasis added). From these disclosures, Kravette discloses a predefined plurality of trigger events (*e.g.*, counting the number of papers and measuring elapsed time).

Claim 30 next recites and Kravette discloses "*means for incrementing a counter corresponding to the trigger event upon detection of the occurrence of the trigger event*." **Ex. PAT-A**, '565 Patent, 92:32-34 (emphasis added).

Kravette discloses a counter ("counter") that increments a counter value based on the number of papers ("trigger event").

> "**A counter counts the number of papers processed by the copier producing a count signal**. A monitoring system computer receives the count signal and **increments a count value** over a predetermined period."

Ex. PA-B, Kravette, 2:56-60 (emphasis added).

> "Each paper processing device has **an internal paper counter**, **this counter counts paper and produces an internal count signal 402 which increments the counter**."

Id., 5:19-21 (emphasis added).

Kravette also discloses that the real time clock counts the elapsed time using an internal real time clock ("counter").

> "monitoring system CPU 102 generates an **internal real time clock** in a step 309."

Id., 15:62-63 (emphasis added).

Claim 30 next recites and Kravette discloses "*means for probing for information regarding a use of the product if the counter exceeds a threshold*." **Ex. PAT-A**, '565 Patent, 92:35-36 (emphasis added).

Kravette discloses a display device ("means for probing") that displays the photocopier's status ("information regarding a use of the product").

> "Generally, paper printing and processing devices, and in particular photocopiers, contain **a display device**, usually a liquid crystal, LED or other alpha-numeric display, **for visually displaying to the user the status of the devices**."

Ex. PA-B, Kravette, 4:38-42 (emphasis added). In particular, Kravette discloses that the display device ("means for probing") has a readable counter for displaying the paper count value ("information regarding a use of the product").

> "The internally generated signals which drive the **display device** include diagnostic signals which cause the **photocopier display to display malfunctions within the photocopier or report maintenance requirements** such as toner and paper refill. A paper count signal drives the **display device**, in this case usually an internal, **readable counter to display a total paper count value corresponding to the number of sheets of paper processed by the photocopier**."

Id., 4:42-50 (emphasis added). Kravette also discloses that each copier ("product") has a visual display device ("means for probing") for displaying diagnostic and monitoring signals ("information regarding a use of the product").

> "each copier contains an internal copier CPU for generating the **diagnostic and monitoring signals** which are displayed on **a visual display device**."

Id., 12:21-24 (emphasis added). It is understood that the paper count value and/or diagnostic and monitoring signals can be displayed on the display device when the counter counts or after the counter exceeds a threshold.

Kravette discloses determining when the count value reaches a predetermine count number ("counter exceeds a threshold").

> "ROM 32 contains a program for allowing monitoring CPU 24 to determine **when the count value generated by monitoring CPU 24 equals the predetermined count value** stored in a RAM 28. ROM 32 acts as a secondary clock allowing monitoring CPU 24 to **identify when a predetermined count number has been reached**. When ROM 32 has been triggered monitoring CPU 24 sends a signal through modem 14 indicating that the predetermined number has been reached."

Id., 8:13-22 (emphasis added).

Kravette also discloses determining when the time generated by the real time clock equals the predetermined time period ("counter exceeds a threshold").

> "Computer control 16 contains a ROM 32 which contains a program for allowing monitoring CPU 24 to determine when **the time generated by real time clock 30 equals the predetermined time period** stored in a designated RAM 28. When the two time periods match, monitoring system CPU 24 sends **a signal** through modem 14 to billing computer 38 **indicating that the predetermined time period has ended and forwards the total count value to the billing computer**."

Id., 7:67-8:8 (emphasis added).

Claim 30 next recites and Kravette discloses "*means for storing an input received from the means for probing*." **Ex. PAT-A**, '565 Patent, 92:37-38 (emphasis added).

Kravette discloses that a service person enters data ("input") using the input/output device ("user interface").

> "This may be done **manually by reentering the updated identification data** base into an already existing billing system or by **directly inputting this information** into a billing software program for automatically generating a billing report upon the input of the updated count."

Ex. PA-B, Kravette, 7:11-16 (emphasis added).

Kravette also discloses that the input/output device is a part of the system ("product") and has an internal memory for storing an input received by the service person.

> "Each service person may be equipped with a portable hand held **input/output device 34** in the form of a keypad/display which may become part of the system through an auxiliary input 22a of monitoring CPU 24. In another embodiment it may be input through **an auxiliary input** external to interface 12. Input/output device 34 may also include **internal memory** (not shown)."

Id., 9:41-48 (emphasis added).

Claim 30 next recites and Kravette discloses "*means for transmitting the input to a server*." **Ex. PAT-A**, '565 Patent, 92:39 (emphasis added).

Kravette discloses that the service person's input is transmitted to the central station ("a server")

> "The service person at the job site may also **communicate with the central station through modem 14** by becoming part of system 10, through input/output device 34."

Ex. PA-B, Kravette, 9:49-52 (emphasis added).

y. <u>Claim 31</u>

Claim 31 should be rejected under 35 U.S.C. § 102(e) as unpatentable over Kravette. Requestor provides a concise statement of the substantial new question of patentability for Claim 31 based on Kravette under 35 U.S.C. § 102(e).

Please see attached Exhibit CC-B for a claim chart comparing Kravette with Claim 31 of the '565 Patent under 35 U.S.C. § 102(e)

Claim 31 recites and Kravette discloses "*[t]he unit of claim 30*." **Ex. PAT-A**, '565 Patent, 92:40 (emphasis added). As shown in Section VII.A.2.x, Kravette discloses the unit of claim 30.

Claim 31 next recites and Kravette discloses "*means for monitoring the product for an occurrence in the product of a second trigger event of the predefined plurality of trigger events*." *Id.*, 92:41-43 (emphasis added).

Kravette discloses monitoring internal real time clock ("a second trigger event").

> "…monitoring system CPU 102 generates an **internal real time clock** in a step 309."

Ex. PA-B, Kravette, 15:62-63 (emphasis added).

Claim 31 next recites and Kravette discloses "*means for incrementing a value of a second counter corresponding to the second trigger event upon detection of the occurrence of the second trigger event in the product*." **Ex. PAT-A**, '565 Patent, 92:44-46 (emphasis added).

Kravette discloses incrementing the real time clock ("second counter") that counts the elapsed time corresponding to the internal real time clock ("occurrence of the second trigger event"). For example, the minute counter increments at every 60 counts of the second counter ("second trigger event").

> "…monitoring system CPU 102 generates an **internal real time clock** in a step 309."

Ex. PA-B, Kravette, 5:62-63 (emphasis added).

z. <u>Claim 32</u>

Claim 32 should be rejected under 35 U.S.C. § 102(e) as unpatentable over Kravette. Requestor provides a concise statement of the substantial new question of patentability for Claim 32 based on Kravette under 35 U.S.C. § 102(e).

Please see attached Exhibit CC-B for a claim chart comparing Kravette with Claim 32 of the '565 Patent under 35 U.S.C. § 102(e)

Claim 32 recites and Kravette discloses "*[t]he unit of claim 30 [sic]*." **Ex. PAT-A**, '565 Patent, 92:47 (emphasis added). As shown in Section VII.A.2.y, Kravette discloses the unit of claim 31.

Claim 32 next recites and Kravette discloses "*means for storing the second counter on the device*." *Id.*, 92:48 (emphasis added).

Kravette discloses determining when the time generated by the real time clock ("second counter") equals the predetermined time period.

> "Computer control 16 contains a ROM 32 which contains a program for allowing monitoring CPU 24 to determine when **the time generated by real time clock 30 equals the predetermined time period** stored in a designated RAM 28. When the two time periods match, monitoring system CPU 24 sends **a signal** through modem 14 to billing computer 38 **indicating that the predetermined time period has ended and forwards the total count value to the billing computer**."

Ex. PA-B, Kravette, 7:67-8:8 (emphasis added). It is understood from this disclosure that the second counter is stored in memory.

Claim 32 next recites and Kravette discloses "*means for transmitting the value of the second counter to the server*." **Ex. PAT-A**, '565 Patent, 92:49-50 (emphasis added).

Kravette discloses sending a signal ("value of the second counter") to the billing computer. The signal indicates that the predetermined time period counted by the real time clock ("second counter") has ended.

> "Computer control 16 contains a ROM 32 which contains a program for allowing monitoring CPU 24 to determine when **the time generated by real time clock 30 equals the predetermined time period** stored in a designated RAM 28. When the two time periods match, monitoring system CPU 24 **sends a signal through modem 14 to billing computer 38 indicating that the predetermined time period has ended and forwards the total count value to the billing computer**."

Ex. PA-B, Kravette, 7:67-8:8 (emphasis added). It is understood from this disclosure that the signal sent to the billing computer contains the value of the real time clock ("second counter").

3. <u>Anticipated By Thacher Under 35 U.S.C. § 102(e)</u>

a. <u>Claim 1</u>

Claim 1 should be rejected under 35 U.S.C. § 102(e) as unpatentable over Thacher. Requestor provides a concise statement of the substantial new question of patentability for Claim 1 based on Thacher under 35 U.S.C. § 102(e).

Please see attached Exhibit CC-C for a claim chart comparing Thacher with Claim 1 of the '565 Patent under 35 U.S.C. § 102(e)

Claim 1 recites and Thacher discloses *"[a] unit, comprising: a memory; a transmitter; and a processor*." **Ex. PAT-A**, '565 Patent, 90:14-17 (emphasis added).

Thacher discloses a video game machine ("unit").

"The player then inserts his credit card into a credit card reader of any of the

video game machines connected to the system."

Ex. PA-C, Thacher, 2:53-55 (emphasis added).

Thacher discloses that the video game machine ("unit") has an internal memory.

"Another embodiment of the invention is a tournament system comprising an electronic game including **an internal memory** for storing at least score data signals relating to scores achieved on the game…"

Id., 4:62-65 (emphasis added).

Thacher discloses that each video game machine has an interface to a local area network.

"A central computer 6 interfaces with the **local area network 4**, and thus can communicate with **each interface 3**."

Id., 5:61-63 (emphasis added). It is understood that the interface of each video game machine has a transmitter to interface to the local area network.

Thacher also discloses a modem ("transmitter").

"the interfaces are connected through **MODEMs 9** to telephone lines or other long data links such as time or frequency shared CATV cable 10. The central computer 6 is connected to the data link, i.e. telephone line or CATV cable via its own MODEM, via a two-way videotext channel for example."

Id., 6:1-6:6 (emphasis added).

Thacher discloses a microprocessor ("processor").

"The various games which can be utilized in the tournament system described herein are **microprocessor** based and which transmit their scores, usually to an electronically operated display, via an internal bus."

Id., 2:1-4 (emphasis added).

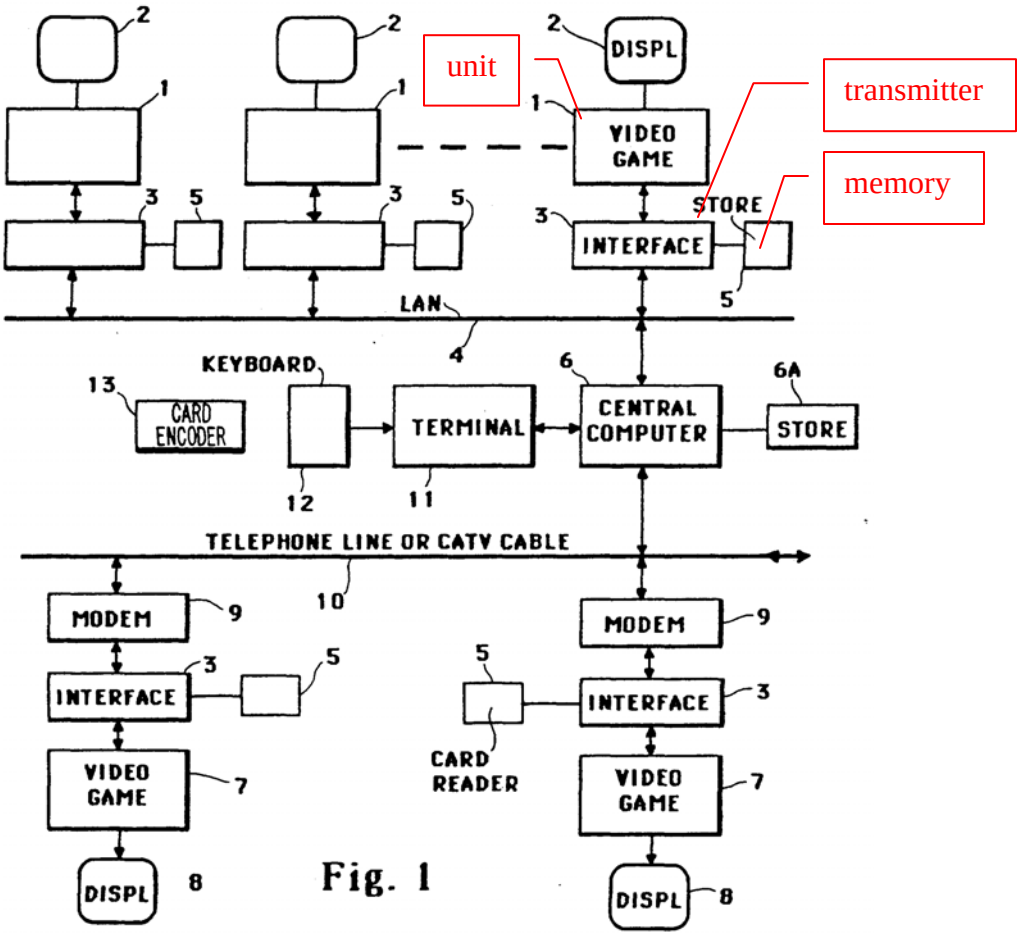

Fig. 1

Id., Fig. 1.

Claim 1 next recites and Thacher discloses "*a processor, coupled to the memory and to the transmitter*." **Ex. PAT-A**, '565 Patent, 90:17-18 (emphasis added).

Thacher discloses that the microprocessor ("processor") is coupled to the memory for storing scores and the transmitter for transmitting the stored scores.

> "The various games which can be utilized in the tournament system described herein are **microprocessor** based and which **transmit their scores**, usually to an electronically operated display, via an internal bus."

Ex. PA-C, Thacher, 2:1-4 (emphasis added).

Claim 1 next recites and Thacher discloses "*[the processor … configured to] monitor a product for an occurrence in the product of a trigger event of a predefined plurality of trigger events*." **Ex. PAT-A**, '565 Patent, 90:17-21 (emphasis added).

Thacher discloses a game terminal ("product") for playing electronic games.

> "In addition, a **remote terminal 11**, having a keyboard 12 connected thereto is connected to the central computer 6. The **terminal 11** can be one merely having limited memory, utilizing memory of the central computer 6, or can be a so-called smart terminal, containing its own substantial memory and processing power. Alternatively in some instances it may be desirable to have the **terminal 11** with keyboard 12 connected to the central computer by telephone line, CATV cable or other data link."

Ex. PA-C, Thacher, 6:7-16 (emphasis added).

Thacher discloses displaying scores ("monitoring … of a trigger event of a predefined plurality of trigger events") of games on the player's game terminal ("product").

> "apparatus for **displaying the scores** locally at the games…"

Id., 4:8 (emphasis added).

Thacher also discloses monitoring the start and end of a game ("trigger event of a predefined plurality of trigger events").

> "The data appearing on address and control bus 16 also includes **signals relating to confirmation of the start of the game**, which can be used to define the end of the game (i.e. that the **count of "men" or tries** has been decremented to zero) signals, and other such supervisory and controlling information."

Id., 11:52-57 (emphasis added).

> "When the game has been completed, **a code signal or signals identifying the end of the game** appears on the address and control bus 16 from the video game. This can be for example the decremented value of game "men" or attempts, or the like. This signal is identified in comparators 28, which had stored therein the predetermined code signals designating "end of game" which were initially downloaded into RAM 26A."

Id., 14:52-59 (emphasis added).

Thacher also discloses sensing ("monitoring") the end of a game ("trigger event of a predefined plurality of trigger events").

> "When a display has been downloaded in RAM 28 from central computer 6, microprocessor 31 can **sense the end of the game** as described earlier (or can force the end of the game) by applying a signal via bus 23 and peripheral interface adaptor 27 to apply a control signal on lead 54 to multiplexer 50, to switch so that the R, G, B and SYNC outputs of dematrix 49 pass to output port 53 instead of the R, G, B and SYNC inputs from input 52. **End of game signals** eventually normally will appear on the bus as if a game had been left unfinished."

Id., 16:9-18 (emphasis added). From these disclosures, Thacher discloses a predefined plurality of trigger events (*e.g.*, counting game scores, counting "men" or tries, detecting a start of a game, detecting an end of a game).

Claim 1 next recites and Thacher discloses "*[the processor … configured to] increment a counter corresponding to the trigger event upon detection of the occurrence of the trigger event*." **Ex. PAT-A**, '565 Patent, 90:22-23 (emphasis added).

Thacher discloses incrementing score data ("counter") as the player plays a game.

> "The **score data** is stored in interface 3 as it **increments**."

Ex. PA-C, Thacher, 8:1-2 (emphasis added).

Thacher also discloses decrements the count of "men" or attempts ("counter").

> "The data appearing on address and control bus 16 also includes signals relating to confirmation of the start of the game, which can be used to define the end of the game (i.e. that **the count of "men" or tries** has been decremented to zero) signals…"

Id., 11:52-56 (emphasis added). It is understood that a disclosure of decrementing a counter teaches incrementing the counter.

Claim 1 next recites and Thacher discloses "*[the processor … configured to] cause the display of a user interface, configured to probe for information regarding a use of the product, if the counter exceeds a threshold*." **Ex. PAT-A**, '565 Patent, 90:24-26 (emphasis added).

Thacher discloses counting of “men” or tries and determining whether it reached to zero (“counter exceeds a threshold”).

> “The data appearing on address and control bus 16 also includes signals relating to confirmation of the start of the game, which can be used to define the end of the game (i.e. that **the count of "men" or tries has been decremented to zero**) signals…”

Ex. PA-C, Thacher, 11:52-56 (emphasis added). It is understood that a disclosure of decrementing a counter teaches incrementing the counter.

Thacher discloses that the game score at the end of the game (“if the counter exceeds a threshold”) is displayed and transmitted. The player can manually enter his score (“probe for information regarding a use of the product”).

> At the end of the game, **the score is transmitted** to the central computer and is stored. Alternatively, **the game can be polled and a continuously updated score transmitted** to the central computer. As a further alternative, the validated player could **enter his score manually** on a keyboard associated with the video game.

Id., 2:67-3:5 (emphasis added).

Thacher also discloses displaying at the end of the game (“if the counter exceeds a threshold”) at each of the video games (“user interface”) a winner announcement (“information regarding a use”) of the video games (“product”).

> “Central computer 6 then initiates transmission of **a winner announcement signal to each of the video games**.”

Id., 8:22-24 (emphasis added).

Thacher also discloses that other data messages (“information regarding a use of the product”) of future tournament or advertisement or other displays to the video games (“product”).

> “**Data** messages are sent from any of the central computers to lower ranks of computers or to the video games themselves, constituting **announcements of winners, of future tournaments, advertisements** or other displays.”

Id., 3:67-4:3 (emphasis added).

Claim 1 next recites and Thacher discloses "*[the processor … configured to] cause the memory to store an input received from the user interface*." **Ex. PAT-A**, '565 Patent, 90:27-28 (emphasis added).

Thacher discloses an internal memory of the electronic game for storing data signals relating to scores ("input").

> "Another embodiment of the invention is a tournament system comprising **an electronic game including an internal memory for storing at least score data signals relating to scores achieved on the game**, at predetermined memory locations, a data link to a central computer, apparatus for reading the score data stored at the predetermined memory locations, and apparatus for transmitting the score data to the data link for transmission to the central computer."

Ex. PA-C, Thacher, 4:62-5:2 (emphasis added).

Thacher discloses game scores ("input") entered by a player.

> "the validated player could **enter his score manually on a keyboard associated with the video game**."

Id., 3:3-5 (emphasis added). It is understood that the validated player's entry of the score is stored in the memory of the video game.

Claim 1 next recites and Thacher discloses "*[the processor … configured to] cause the transmitter to transmit the input to a server*." **Ex. PAT-A**, '565 Patent, 90:29 (emphasis added).

Thacher discloses transmitting game scores ("input", *e.g.*, score entered by a validated player) to a central computer ("server").

> "Another embodiment of the invention is a tournament system comprising an electronic game including an internal memory for storing at least score data signals relating to scores achieved on the game, at predetermined memory locations, a data link to a central computer, apparatus for reading the score data stored at the predetermined memory locations, and apparatus for **transmitting the score data to the data link for transmission to the central computer**."

Ex. PA-C, Thacher, 4:62-5:2 (emphasis added).

b. <u>Claim 2</u>

Claim 2 should be rejected under 35 U.S.C. § 102(e) as unpatentable over Thacher. Requestor provides a concise statement of the substantial new question of patentability for Claim 2 based on Thacher under 35 U.S.C. § 102(e).

Please see attached Exhibit CC-C for a claim chart comparing Thacher with Claim 2 of the '565 Patent under 35 U.S.C. § 102(e)

Claim 2 recites "*[t]he unit of claim 1*." **Ex. PAT-A**, '565 Patent, 90:30 (emphasis added). As shown in Section VII.A.3.a, Thacher discloses the unit of claim 1.

Claim 2 next recites and Thacher discloses that "*the input reflects a request to schedule maintenance*." *Id.*, 90:30-31 (emphasis added).

Thacher discloses displaying a maintenance sequence. It is understood that the player's input that caused the end of the game starts a maintenance sequence.

> "**Once the game has ended**, the local video game shuts itself off in the normal way, and displays on its screen a **maintenance sequence** to attract players, and is ready for the next player."

Ex. PA-C, Thacher, 15:17-20 (emphasis added).

c. <u>Claim 3</u>

Claim 3 should be rejected under 35 U.S.C. § 102(e) as unpatentable over Thacher. Requestor provides a concise statement of the substantial new question of patentability for Claim 3 based on Thacher under 35 U.S.C. § 102(e).

Please see attached Exhibit CC-C for a claim chart comparing Thacher with Claim 3 of the '565 Patent under 35 U.S.C. § 102(e)

Claim 3 recites "*[t]he unit of claim 1*." **Ex. PAT-A**, '565 Patent, 90:32 (emphasis added). As shown in Section VII.A.3.a, Thacher discloses the unit of claim 1.

Claim 3 next recites and Thacher discloses that "*the input reflects a submission of a purchase order*." *Id.*, 90:32-33 (emphasis added).

Thacher discloses that the player purchases a game credit by inserting a credit card into a credit card reader of the video game machine.

> "The player then **inserts his credit card into a credit card reader of any of the video game machines** connected to the system."

Ex. PA-C, Thacher, 2:53-55 (emphasis added).

d. <u>Claim 4</u>

Claim 4 should be rejected under 35 U.S.C. § 102(e) as unpatentable over Thacher. Requestor provides a concise statement of the substantial new question of patentability for Claim 4 based on Thacher under 35 U.S.C. § 102(e).

Please see attached Exhibit CC-C for a claim chart comparing Thacher with Claim 4 of the '565 Patent under 35 U.S.C. § 102(e)

Claim 4 recites "*[t]he unit of claim 1*." **Ex. PAT-A**, '565 Patent, 90:34 (emphasis added). As shown in Section VII.A.3.a, Thacher discloses the unit of claim 1.

Claim 4 next recites and Thacher discloses that "*the input reflects a request for interactive assistance*." *Id.*, 90:34-35 (emphasis added).

Thacher discloses displaying an announcement or a menu on the display of the video game machine to allow the player to select a function by pushing a key on the interface keyboard ("interactive assistance"). It is understood that the announcement or the menu is displayed by the player's inserting of a credit card ("input") to start the game.

> "It should be noted that the central computer 6 can send messages in addition to **"game start" message** to the video games. For example in the case of a tournament it can transmit data signals to each of the video games to **display an announcement**, for example, the participation of the immediately following game in a specific tournament. The central computer can also **read a menu or other**

> **similar display allowing the player to select a function by pushing a key on the interface keyboard**."

Ex. PA-C, Thacher, 7:33-42 (emphasis added).

e. <u>Claim 5</u>

Claim 5 should be rejected under 35 U.S.C. § 102(e) as unpatentable over Thacher. Requestor provides a concise statement of the substantial new question of patentability for Claim 5 based on Thacher under 35 U.S.C. § 102(e).

Please see attached Exhibit CC-C for a claim chart comparing Thacher with Claim 5 of the '565 Patent under 35 U.S.C. § 102(e)

Claim 5 recites and Thacher discloses "*[t]he unit of claim 1*." **Ex. PAT-A**, '565 Patent, 90:36 (emphasis added). As shown in Section VII.A.3.a, Thacher discloses the unit of claim 1.

Claim 5 next recites and Thacher discloses that "*the processor is further configured to: monitor the product for an occurrence in the product of a second trigger event of the predefined plurality of trigger events*." *Id.*, 90:36-40 (emphasis added).

Thacher discloses monitoring the count of "men" or attempts ("second trigger event").

> "The data appearing on address and control bus 16 also includes signals relating to confirmation of the start of the game, which can be used to define the end of the game (i.e. that **the count of "men" or tries has been decremented** to zero) signals,"

Ex. PA-C, Thacher, 11:52-56, emphasis added.

Claim 5 next recites and Thacher discloses that "[*the processor is further configured to:] increment a second counter corresponding to the second trigger event upon detection of the occurrence of the second trigger event in the product*." **Ex. PAT-A**, '565 Patent, 90:41-43 (emphasis added).

Thacher discloses decrementing the “men” or attempts using a “second counter”. It is understood that a disclosure of decrementing a counter teaches incrementing the counter.

> “The data appearing on address and control bus 16 also includes signals relating to confirmation of the start of the game, which can be used to define the end of the game (i.e. that **the count of "men" or tries has been decremented** to zero) signals,”

Ex. PA-C, Thacher, 11:52-56, emphasis added.

f. <u>Claim 6</u>

Claim 6 should be rejected under 35 U.S.C. § 102(e) as unpatentable over Thacher. Requestor provides a concise statement of the substantial new question of patentability for Claim 6 based on Thacher under 35 U.S.C. § 102(e).

Please see attached Exhibit CC-C for a claim chart comparing Thacher with Claim 6 of the ‘565 Patent under 35 U.S.C. § 102(e)

Claim 6 recites and Thacher discloses “*[t]he unit of claim 5*.” **Ex. PAT-A**, ‘565 Patent, 90:44 (emphasis added). As shown in Section VII.A.3.e, Thacher discloses the unit of claim 5.

Claim 6 next recites and Thacher discloses that “*the processor is further configured to: cause the memory to store the second counter*.” *Id.*, 90:44-46 (emphasis added).

Thacher discloses storing the value of the “men” or attempts (“second counter”) to compare with the predetermined code signals.

> “When the game has been completed, a code signal or signals identifying the end of the game appears on the address and control bus 16 from the video game. This can be for example the **decremented value of game "men" or attempts**, or the like. **This signal is identified in comparators 28, which had stored therein the predetermined code signals designating "end of game"** which were initially downloaded into RAM 26A.”

Ex. PA-C, Thacher, 14:52-59, emphasis added.

Claim 6 next recites and Thacher discloses that "[*the processor is further configured to:] cause the transmitter to transmit a value of the second counter*." **Ex. PAT-A**, '565 Patent, 90:47-48 (emphasis added).

Thacher discloses that that data appearing on the control bus includes game signals such as the count of "men" or tries ("value of the second counter"). It is understood that the data appearing on the control bus is transmitted to the central computer.

> "**The data appearing on address and control bus 16 also includes signals** relating to confirmation of the start of the game, which can be used to define the end of the game (i.e. that **the count of "men" or tries has been decremented** to zero) signals,"

Ex. PA-C, Thacher, 11:52-56, emphasis added.

g. <u>Claim 8</u>

Claim 8 should be rejected under 35 U.S.C. § 102(e) as unpatentable over Thacher. Requestor provides a concise statement of the substantial new question of patentability for Claim 8 based on Thacher under 35 U.S.C. § 102(e).

Please see attached Exhibit CC-C for a claim chart comparing Thacher with Claim 8 of the '565 Patent under 35 U.S.C. § 102(e)

Claim 8 recites "*[t]he unit of claim 1*." **Ex. PAT-A**, '565 Patent, 90:53 (emphasis added). As shown in Section VII.A.3.a, Thacher discloses the unit of claim 1.

Claim 8 next recites and Thacher discloses that "*one of the predefined plurality of trigger events is a problem associated with the product*." *Id.*, 90:53-55 (emphasis added).

Thacher discloses performing useful and important functions including alarming tampering of games ("problem associated with the product").

> "In the invention described above the central computers can **perform other useful and important functions**, such as cash management and accounting, ordering or purchasing of goods displayed on the game display with automatic

> debiting of an account, seeding of pools, public credit card validation, awarding of free games or other prizes, generation of management reports, transmission of electronic mail messages between computers of the hierarchy (or if the interface is supplied with a keyboard, between electronic games), **indication of alarms to remotely located attendants in case of tampering of games**, storage of statistical data concerning the total number of games played and the number of games played for cash, disablement of games from a remote location, communication of the status of operation of each game, storage of data and management reports, provision of public messages and displays, etc."

Ex. PA-C, Thacher, 19:1-17 (emphasis added).

h. <u>Claim 9</u>

Claim 9 should be rejected under 35 U.S.C. § 102(e) as unpatentable over Thacher. Requestor provides a concise statement of the substantial new question of patentability for Claim 9 based on Thacher under 35 U.S.C. § 102(e).

Please see attached Exhibit CC-C for a claim chart comparing Thacher with Claim 9 of the '565 Patent under 35 U.S.C. § 102(e)

Claim 9 recites "*[t]he method [sic] of claim 8.*" **Ex. PAT-A**, '565 Patent, 90:56 (emphasis added). As shown in Section VII.A.3.g, Thacher discloses the unit of claim 8.

Claim 9 next recites and Thacher discloses that "*the problem is an equipment problem.*" *Id.*, 90:56-57 (emphasis added).

Thacher discloses tampering of games ("equipment problem").

> "…**indication of alarms to remotely located attendants in case of tampering of games**, …"

Ex. PA-C, Thacher, 19:10-12 (emphasis added).

i. <u>Claim 10</u>

Claim 10 should be rejected under 35 U.S.C. § 102(e) as unpatentable over Thacher. Requestor provides a concise statement of the substantial new question of patentability for Claim 10 based on Thacher under 35 U.S.C. § 102(e).

Please see attached Exhibit CC-C for a claim chart comparing Thacher with Claim 10 of the '565 Patent under 35 U.S.C. § 102(e)

Claim 10 recites "*[t]he unit of claim 1*." **Ex. PAT-A**, '565 Patent, 90:58 (emphasis added). As shown in Section VII.A.3.a, Thacher discloses the unit of claim 1.

Claim 10 next recites and Thacher discloses that "*a trigger event of the predefined plurality of trigger events is a use of at least one product feature*." *Id.*, 90:58-60 (emphasis added).

Thacher discloses inserting a credit card ("use of at least one product feature").

> "The player then inserts his credit card into a credit card reader of any of the **video game machines** connected to the system."

Ex. PA-C, Thacher, 2:53-55 (emphasis added). Thacher also discloses pressing keypads ("use of at least one product feature").

> "The player can select the menu choice by **pressing one or more keys of keypad 32**, which is read by microprocessor 31 as described earlier, and which information is forwarded as data signals to the central computer 6, and which can be transmitted via the network described with respect to FIG. 2 to any other computer or video game."

Id., 16:45-51 (emphasis added).

Thacher also discloses pushing a key on the interface keyboard ("use of at least one product feature").

> "The central computer can also **read a menu or other similar display allowing the player to select a function by pushing a key on the interface keyboard**."

Id., 7:39-42 (emphasis added).

j. <u>Claim 11</u>

Claim 11 should be rejected under 35 U.S.C. § 102(e) as unpatentable over Thacher. Requestor provides a concise statement of the substantial new question of patentability for Claim 11 based on Thacher under 35 U.S.C. § 102(e).

Please see attached Exhibit CC-C for a claim chart comparing Thacher with Claim 11 of the '565 Patent under 35 U.S.C. § 102(e)

Claim 11 recites "*[t]he method [sic] of claim 10*." **Ex. PAT-A**, '565 Patent, 90:61 (emphasis added). As shown in Section VII.A.3.i, Thacher discloses the unit of claim 10.

Claim 11 next recites and Thacher discloses that "*the at least one product feature is "undo"*." *Id.*, 90:61-62 (emphasis added).

Thacher discloses that the menu has functions for the player to select by pushing a key on the interface keyboard ("product feature"). It is understood that the menu contains a cancel or undo function ("product feature").

> "The central computer can also **read a menu or other similar display allowing the player to select a function by pushing a key on the interface keyboard**."

Ex. PA-C, Thacher, 7:39-42 (emphasis added).

k. <u>Claim 13</u>

Claim 13 should be rejected under 35 U.S.C. § 102(e) as unpatentable over Thacher. Requestor provides a concise statement of the substantial new question of patentability for Claim 13 based on Thacher under 35 U.S.C. § 102(e).

Please see attached Exhibit CC-C for a claim chart comparing Thacher with Claim 13 of the '565 Patent under 35 U.S.C. § 102(e)

Claim 13 recites "*[t]he unit of claim 1*." **Ex. PAT-A**, '565 Patent, 90:65 (emphasis added). As shown in Section VII.A.3.a, Thacher discloses the unit of claim 1.

Claim 13 next recites and Thacher discloses that "*a cellular telephone*." *Id.*, 90:65-66 (emphasis added).

Thacher discloses data link via a telephone line.

> "Alternatively in some instances it may be desirable to have the terminal 11 with keyboard 12 connected to the central computer by **telephone line**, CATV cable or other data link."

Ex. PA-C, Thacher, 6:12-16 (emphasis added).

Thacher discloses a video game machine ("product").

> "The player then inserts his credit card into a credit card reader of any of the **video game machines** connected to the system."

Id., 2:53-55 (emphasis added).

From these teachings, it is understood that the product can be a cellular phone that can play a video game and has a telephone line.

l. <u>Claim 14</u>

Claim 14 should be rejected under 35 U.S.C. § 102(e) as unpatentable over Thacher. Requestor provides a concise statement of the substantial new question of patentability for Claim 14 based on Thacher under 35 U.S.C. § 102(e).

Please see attached Exhibit CC-C for a claim chart comparing Thacher with Claim 14 of the '565 Patent under 35 U.S.C. § 102(e)

Claim 14 recites "*[t]he unit of claim 1*." **Ex. PAT-A**, '565 Patent, 91:1 (emphasis added). As shown in Section VII.A.3.a, Thacher discloses the unit of claim 1.

Claim 14 next recites and Thacher discloses that "*the processor is further configured to increment the counter corresponding to the trigger event upon detection of a second occurrence of the trigger event*." *Id.*, 91:1-4 (emphasis added).

Thacher discloses incrementing score data ("counter") as the player plays a game.

"The **score data** is stored in interface 3 as it **increments**."

Ex. PA-C, Thacher, 8:1-2 (emphasis added).

It is understood that the score data can be incremented on a second occurrence of a trigger event.

m. <u>Claim 15</u>

Claim 15 should be rejected under 35 U.S.C. § 102(e) as unpatentable over Thacher. Requestor provides a concise statement of the substantial new question of patentability for Claim 15 based on Thacher under 35 U.S.C. § 102(e).

Please see attached Exhibit CC-C for a claim chart comparing Thacher with Claim 15 of the '565 Patent under 35 U.S.C. § 102(e)

Claim 15 recites and Thacher discloses *"[A] method, comprising: monitoring a product for an occurrence in the product of a trigger event of a predefined plurality of trigger events*."

Ex. PAT-A, '565 Patent, 91:5-7 (emphasis added).

Thacher discloses a game terminal ("product") for playing electronic games.

> "In addition, a **remote terminal 11**, having a keyboard 12 connected thereto is connected to the central computer 6. The **terminal 11** can be one merely having limited memory, utilizing memory of the central computer 6, or can be a so-called smart terminal, containing its own substantial memory and processing power. Alternatively in some instances it may be desirable to have the **terminal 11** with keyboard 12 connected to the central computer by telephone line, CATV cable or other data link."

Ex. PA-C, Thacher, 6:7-16 (emphasis added).

Thacher discloses displaying scores ("monitoring … of a trigger event of a predefined plurality of trigger events") of games on the player's game terminal ("product").

> "apparatus for **displaying the scores** locally at the games…"

Id., 4:8 (emphasis added).

Thacher also discloses monitoring the start and end of a game ("trigger event of a predefined plurality of trigger events").

> "The data appearing on address and control bus 16 also includes **signals relating to confirmation of the start of the game**, which can be used to define the end of the game (i.e. that the count of "men" or tries has been decremented to zero) signals, and other such supervisory and controlling information."

Id., 11:52-57 (emphasis added).

> "When the game has been completed, **a code signal or signals identifying the end of the game** appears on the address and control bus 16 from the video game. This can be for example the decremented value of game "men" or attempts, or the like. This signal is identified in comparators 28, which had stored therein the predetermined code signals designating "end of game" which were initially downloaded into RAM 26A."

Id., 14:52-59 (emphasis added).

Thacher also discloses sensing ("monitoring") the end of a game ("trigger event of a predefined plurality of trigger events").

> "When a display has been downloaded in RAM 28 from central computer 6, microprocessor 31 can **sense the end of the game** as described earlier (or can force the end of the game) by applying a signal via bus 23 and peripheral interface adaptor 27 to apply a control signal on lead 54 to multiplexer 50, to switch so that the R, G, B and SYNC outputs of dematrix 49 pass to output port 53 instead of the R, G, B and SYNC inputs from input 52. **End of game signals** eventually normally will appear on the bus as if a game had been left unfinished."

Id., 16:9-18 (emphasis added). From these disclosures, Thacher discloses a predefined plurality of trigger events (*e.g.*, counting game scores, counting "men" or tries, detecting a start of a game, detecting an end of a game).

Claim 15 next recites and Thacher discloses "*incrementing a counter corresponding to the trigger event upon detection of the occurrence of the trigger event in the product*." **Ex. PAT-A**, '565 Patent, 91:8-10 (emphasis added).

Thacher discloses incrementing score data ("counter") as the player plays a game.

"The **score data** is stored in interface 3 as it **increments**."

Ex. PA-C, Thacher, 8:1-2 (emphasis added).

Thacher also discloses decrements the count of "men" or attempts ("counter").

> "The data appearing on address and control bus 16 also includes signals relating to confirmation of the start of the game, which can be used to define the end of the game (i.e. that **the count of "men" or tries** has been decremented to zero) signals…"

Id., 11:52-56 (emphasis added). It is understood that a disclosure of decrementing a counter teaches incrementing the counter.

Claim 15 next recites and Thacher discloses "*displaying a user interface, configured to probe for information regarding a use of the product, if the counter exceeds a threshold*." **Ex. PAT-A**, '565 Patent, 91:11-13 (emphasis added).

Thacher discloses counting of "men" or tries and determining whether it reached to zero ("counter exceeds a threshold").

> "The data appearing on address and control bus 16 also includes signals relating to confirmation of the start of the game, which can be used to define the end of the game (i.e. that **the count of "men" or tries has been decremented to zero**) signals…"

Ex. PA-C, Thacher, 11:52-56 (emphasis added). It is understood that a disclosure of decrementing a counter teaches incrementing the counter.

Thacher discloses displaying at the end of the game ("if the counter exceeds a threshold") at each of the video games ("user interface") a winner announcement ("information regarding a use") of the video games ("product").

> "Central computer 6 then initiates transmission of **a winner announcement signal to each of the video games**."

Id., 8:22-24 (emphasis added).

Thacher also discloses that other data messages ("information regarding a use of the product") of future tournament or advertisement or other displays to the video games ("product").

> "**Data** messages are sent from any of the central computers to lower ranks of computers or to the video games themselves, constituting **announcements of winners, of future tournaments, advertisements** or other displays."

Id., 3:67-4:3 (emphasis added).

Claim 15 next recites and Thacher discloses "*storing an input received from the user interface on a device*." **Ex. PAT-A**, '565 Patent, 91:14-15 (emphasis added).

Thacher discloses an internal memory of the electronic game for storing data signals relating to scores ("input").

> "Another embodiment of the invention is a tournament system comprising **an electronic game including an internal memory for storing at least score data signals relating to scores achieved on the game**, at predetermined memory locations, a data link to a central computer, apparatus for reading the score data stored at the predetermined memory locations, and apparatus for transmitting the score data to the data link for transmission to the central computer."

Ex. PA-C, Thacher, 4:62-5:2 (emphasis added).

Thacher discloses game scores ("input") entered by a player.

> "the validated player could **enter his score manually on a keyboard associated with the video game**."

Id., 3:3-5 (emphasis added). It is understood that the validated player's entry of the score is stored in the memory of the video game.

Claim 15 next recites and Thacher discloses "*transmitting the input to a server*." **Ex. PAT-A**, '565 Patent, 91:16 (emphasis added).

Thacher discloses transmitting game scores ("input", *e.g.*, score entered by a validated player) to a central computer ("server").

> "Another embodiment of the invention is a tournament system comprising an electronic game including an internal memory for storing at least score data signals relating to scores achieved on the game, at predetermined memory locations, a data link to a central computer, apparatus for reading the score data stored at the predetermined memory locations, and apparatus for **transmitting the score data to the data link for transmission to the central computer**."

Ex. PA-C, Thacher, 4:62-5:2 (emphasis added).

n. <u>Claim 17</u>

Claim 17 should be rejected under 35 U.S.C. § 102(e) as unpatentable over Thacher. Requestor provides a concise statement of the substantial new question of patentability for Claim 17 based on Thacher under 35 U.S.C. § 102(e).

Please see attached Exhibit CC-C for a claim chart comparing Thacher with Claim 17 of the '565 Patent under 35 U.S.C. § 102(e)

Claim 17 recites and Thacher discloses "*[t]he method of claim 15*." **Ex. PAT-A**, '565 Patent, 91:20 (emphasis added). As shown in Section VII.A.3.m, Thacher discloses the method of claim 15.

Claim 17 next recites and Thacher discloses "*monitoring the product for an occurrence in the product of a second trigger event of the predefined plurality of trigger events*." *Id.*, 91:21-23 (emphasis added).

Thacher discloses monitoring the count of "men" or attempts ("second trigger event").

> "The data appearing on address and control bus 16 also includes signals relating to confirmation of the start of the game, which can be used to define the end of the game (i.e. that **the count of "men" or tries has been decremented** to zero) signals,"

Ex. PA-C, Thacher, 11:52-56, emphasis added.

Claim 17 next recites and Thacher discloses that "*incrementing a value of a second counter corresponding to the second trigger event upon detection of the second trigger event in the product*." **Ex. PAT-A**, '565 Patent, 91:24-26 (emphasis added).

Thacher discloses decrementing the "men" or attempts using a "second counter". It is understood that a disclosure of decrementing a counter teaches incrementing the counter.

> "The data appearing on address and control bus 16 also includes signals relating to confirmation of the start of the game, which can be used to define the end of the game (i.e. that **the count of "men" or tries has been decremented** to zero) signals,"

Ex. PA-C, Thacher, 11:52-56, emphasis added.

o. <u>Claim 18</u>

Claim 18 should be rejected under 35 U.S.C. § 102(e) as unpatentable over Thacher. Requestor provides a concise statement of the substantial new question of patentability for Claim 18 based on Thacher under 35 U.S.C. § 102(e).

Please see attached Exhibit CC-C for a claim chart comparing Thacher with Claim 18 of the '565 Patent under 35 U.S.C. § 102(e)

Claim 18 recites and Thacher discloses "*[t]he method of claim 17*." **Ex. PAT-A**, '565 Patent, 91:27 (emphasis added). As shown in Section VII.A.3.n, Thacher discloses the method of claim 17.

Claim 18 next recites and Thacher discloses that "*storing the second counter on the device*." *Id.*, 91:28 (emphasis added).

Thacher discloses storing the value of the "men" or attempts ("second counter") to compare with the predetermined code signals.

> "When the game has been completed, a code signal or signals identifying the end of the game appears on the address and control bus 16 from the video game. This can be for example the **decremented value of game "men" or attempts**, or the

> like. **This signal is identified in comparators 28, which had stored therein the predetermined code signals designating "end of game"** which were initially downloaded into RAM 26A."

Ex. PA-C, Thacher, 14:52-59, emphasis added.

Claim 18 next recites and Thacher discloses "*transmitting a value of the second counter to the server*." **Ex. PAT-A**, '565 Patent, 91:29 (emphasis added).

Thacher discloses that that data appearing on the control bus includes game signals such as the count of "men" or tries ("value of the second counter"). It is understood that the data appearing on the control bus is transmitted to the central computer.

> "**The data appearing on address and control bus 16 also includes signals** relating to confirmation of the start of the game, which can be used to define the end of the game (i.e. that **the count of "men" or tries has been decremented** to zero) signals,"

Ex. PA-C, Thacher, 11:52-56, emphasis added.

p. <u>Claim 19</u>

Claim 19 should be rejected under 35 U.S.C. § 102(e) as unpatentable over Thacher. Requestor provides a concise statement of the substantial new question of patentability for Claim 19 based on Thacher under 35 U.S.C. § 102(e).

Please see attached Exhibit CC-C for a claim chart comparing Thacher with Claim 19 of the '565 Patent under 35 U.S.C. § 102(e)

Claim 19 recites "*[t]he method of claim 15*." **Ex. PAT-A**, '565 Patent, 91:30 (emphasis added). As shown in Section VII.A.3.m, Thacher discloses the method of claim 15.

Claim 19 next recites and Thacher discloses that "*one of the predefined plurality of trigger events is a problem associated with the product*." *Id.*, 91:30-32 (emphasis added).

Thacher discloses performing useful and important functions including alarming tampering of games ("problem associated with the product").

> "In the invention described above the central computers can **perform other useful and important functions**, such as cash management and accounting, ordering or purchasing of goods displayed on the game display with automatic debiting of an account, seeding of pools, public credit card validation, awarding of free games or other prizes, generation of management reports, transmission of electronic mail messages between computers of the hierarchy (or if the interface is supplied with a keyboard, between electronic games), **indication of alarms to remotely located attendants in case of tampering of games**, storage of statistical data concerning the total number of games played and the number of games played for cash, disablement of games from a remote location, communication of the status of operation of each game, storage of data and management reports, provision of public messages and displays, etc."

Ex. PA-C, Thacher, 19:1-17 (emphasis added).

q. <u>Claim 21</u>

Claim 21 should be rejected under 35 U.S.C. § 102(e) as unpatentable over Thacher. Requestor provides a concise statement of the substantial new question of patentability for Claim 21 based on Thacher under 35 U.S.C. § 102(e).

Please see attached Exhibit CC-C for a claim chart comparing Thacher with Claim 21 of the '565 Patent under 35 U.S.C. § 102(e)

Claim 21 recites "*[t]he method of claim 19*." **Ex. PAT-A**, '565 Patent, 91:36 (emphasis added). As shown in Section VII.A.3.p, Thacher discloses the method of claim 19.

Claim 21 next recites and Thacher discloses that "*the problem is an equipment problem*." *Id.*, 91:36-37 (emphasis added).

Thacher discloses tampering of games ("equipment problem").

> "…**indication of alarms to remotely located attendants in case of tampering of games**, …."

Ex. PA-C, Thacher, 19:10-12 (emphasis added).

r. <u>Claim 22</u>

Claim 22 should be rejected under 35 U.S.C. § 102(e) as unpatentable over Thacher. Requestor provides a concise statement of the substantial new question of patentability for Claim 22 based on Thacher under 35 U.S.C. § 102(e).

Please see attached Exhibit CC-C for a claim chart comparing Thacher with Claim 22 of the '565 Patent under 35 U.S.C. § 102(e)

Claim 22 recites "*[t]he method of claim 15*." **Ex. PAT-A**, '565 Patent, 91:39 (emphasis added). As shown in Section VII.A.3.m, Thacher discloses the method of claim 15.

Claim 22 next recites and Thacher discloses that "*one of the predefined plurality of trigger events is a use of at least one product feature*." *Id.*, 91:39-41 (emphasis added).

Thacher discloses inserting a credit card ("use of at least one product feature").

> "The player then inserts his credit card into a credit card reader of any of the **video game machines** connected to the system."

Ex. PA-C, Thacher, 2:53-55 (emphasis added). Thacher also discloses pressing keypads ("use of at least one product feature").

> "The player can select the menu choice by **pressing one or more keys of keypad 32**, which is read by microprocessor 31 as described earlier, and which information is forwarded as data signals to the central computer 6, and which can be transmitted via the network described with respect to FIG. 2 to any other computer or video game."

Id., 16:45-51 (emphasis added).

Thacher also discloses pushing a key on the interface keyboard ("use of at least one product feature").

> "The central computer can also **read a menu or other similar display allowing the player to select a function by pushing a key on the interface keyboard**."

Id., 7:39-42 (emphasis added).

s. <u>Claim 25</u>

Claim 25 should be rejected under 35 U.S.C. § 102(e) as unpatentable over Thacher. Requestor provides a concise statement of the substantial new question of patentability for Claim 25 based on Thacher under 35 U.S.C. § 102(e).

Please see attached Exhibit CC-C for a claim chart comparing Thacher with Claim 25 of the '565 Patent under 35 U.S.C. § 102(e)

Claim 25 recites "*[t]he method of claim 15*." **Ex. PAT-A**, '565 Patent, 91:46 (emphasis added). As shown in Section VII.A.3.m, Thacher discloses the method of claim 15.

Claim 25 next recites and Thacher discloses that "*the product is a cellular telephone*." *Id.*, 91:46-47 (emphasis added).

Thacher discloses data link via a telephone line.

> "Alternatively in some instances it may be desirable to have the terminal 11 with keyboard 12 connected to the central computer by **telephone line**, CATV cable or other data link."

Ex. PA-C, Thacher, 6:12-16 (emphasis added).

Thacher discloses a video game machine ("product").

> "The player then inserts his credit card into a credit card reader of any of the **video game machines** connected to the system."

Id., 2:53-55 (emphasis added).

From these teachings, it is understood that the product can be a cellular phone that plays a video game and has a telephone line.

t. <u>Claim 26</u>

Claim 26 should be rejected under 35 U.S.C. § 102(e) as unpatentable over Thacher. Requestor provides a concise statement of the substantial new question of patentability for Claim 26 based on Thacher under 35 U.S.C. § 102(e).

Please see attached Exhibit CC-C for a claim chart comparing Thacher with Claim 26 of the '565 Patent under 35 U.S.C. § 102(e)

Claim 26 recites "*[t]he method of claim 15*." **Ex. PAT-A**, '565 Patent, 91:48 (emphasis added). As shown in Section VII.A.3.m, Thacher discloses the method of claim 15.

Claim 26 next recites and Thacher discloses "*further comprising: incrementing the counter corresponding to the trigger event upon detection of a second occurrence of the trigger event in the product*." *Id.*, 91:48-51 (emphasis added).

Thacher discloses incrementing score data ("counter") as the player plays a game.

"The **score data** is stored in interface 3 as it **increments**."

Ex. PA-C, Thacher, 8:1-2 (emphasis added). It is understood that the score data can be incremented on a second occurrence of a trigger event.

u. <u>Claim 27</u>

Claim 27 should be rejected under 35 U.S.C. § 102(e) as unpatentable over Thacher. Requestor provides a concise statement of the substantial new question of patentability for Claim 27 based on Thacher under 35 U.S.C. § 102(e).

Please see attached Exhibit CC-C for a claim chart comparing Thacher with Claim 27 of the '565 Patent under 35 U.S.C. § 102(e)

Claim 27 recites and Thacher discloses "*[a] tangible computer readable medium having stored thereon, computer executable instructions that, if executed by a computing device, cause the computing device to perform a method*." **Ex. PAT-A**, '565 Patent, 92:1-4 (emphasis added).

Thacher discloses a read only memory ("tangible computer readable medium") that stores firmware ("computer executable instructions") of a game terminal.

"The microprocessor 31 is connected to bus 23 via a buffer 36. Also connected to

> bus 23 is **a read only memory 37 containing firmware** for bootstrap starting the operation of the microprocessor, address decoder 38, and interface to the data link to the central computer."

Ex. PA-C, Thacher, 12:18-22(emphasis added).

Thacher discloses a game program ("computer executable instructions") stored in a video game terminal ("computing device").

> "…because the kind of game to be played can be changed at will, its **program being downloaded from a central computer** linked to each game, players at different games can play interactive games with each other via the data links to the central computer."

Id, 18:64-68(emphasis added).

Claim 27 recites and Thacher discloses "*monitoring a product for an occurrence in the product of a trigger event of a predefined plurality of trigger events.*" **Ex. PAT-A**, '565 Patent, 92:5-6 (emphasis added).

Thacher discloses a terminal ("product") for playing electronic games.

> "In addition, a **remote terminal 11**, having a keyboard 12 connected thereto is connected to the central computer 6. The **terminal 11** can be one merely having limited memory, utilizing memory of the central computer 6, or can be a so-called smart terminal, containing its own substantial memory and processing power. Alternatively in some instances it may be desirable to have the **terminal 11** with keyboard 12 connected to the central computer by telephone line, CATV cable or other data link."

Ex. PA-C, Thacher, 6:7-16 (emphasis added).

Thacher discloses displaying scores ("monitoring … of a trigger event of a predefined plurality of trigger events") of games on the player's game terminal ("product").

> "apparatus for **displaying the scores** locally at the games…"

Id, 4:8 (emphasis added).

Thacher discloses monitoring the start of a game ("trigger event of a predefined plurality of trigger events").

> "The data appearing on address and control bus 16 also includes **signals relating to confirmation of the start of the** game, which can be used to define the end of the game (i.e. that the count of "men" or tries has been decremented to zero) signals, and other such supervisory and controlling information."

Id, 11:52-57 (emphasis added).

Thacher also discloses monitoring the end of a game ("trigger event of a predefined plurality of trigger events").

> "When a display has been downloaded in RAM 28 from central computer 6, microprocessor 31 can **sense the end of the game** as described earlier (or can force the end of the game) by applying a signal via bus 23 and peripheral interface adaptor 27 to apply a control signal on lead 54 to multiplexer 50, to switch so that the R, G, B and SYNC outputs of dematrix 49 pass to output port 53 instead of the R, G, B and SYNC inputs from input 52. **End of game signals** eventually normally will appear on the bus as if a game had been left unfinished."

Id, 16:9-18 (emphasis added). From these disclosures, Thacher discloses a predefined plurality of trigger events (*e.g.*, counting game scores, counting "men" or tries, detecting a start of a game, detecting an end of a game).

Claim 27 next recites and Thacher discloses "*incrementing a counter corresponding to the trigger event upon detection of the occurrence of the trigger event in the product*." **Ex. PAT-A**, '565 Patent, 92:7-9 (emphasis added).

Thacher discloses incrementing score data ("counter") as the player plays a game.

> "The **score data** is stored in interface 3 as it **increments**."

Ex. PA-C, Thacher, 8:1-2 (emphasis added).

Thacher also discloses decrementing the count of "men" or attempts.

> "The data appearing on address and control bus 16 also includes signals relating to confirmation of the start of the game, which can be used to define the end of the game (i.e. that **the count of "men" or tries has been decremented** to zero) signals…"

Id, 11:52-56 (emphasis added). It is understood that a disclosure of decrementing a counter

teaches incrementing the counter.

> "When the game has been completed, a code signal or signals identifying the end of the game appears on the address and control bus 16 from the video game. This can be for example the **decremented value of game "**men**" or attempts**, or the like. This signal is identified in comparators 28, which had stored therein the predetermined code signals designating "end of game" which were initially downloaded into RAM 26A."

Id, 14:52-59 (emphasis added).

Claim 27 next recites and Thacher discloses "*displaying a user interface, configured to probe for information regarding a use of the product, if the counter exceeds a threshold*." **Ex. PAT-A**, '565 Patent, 92:10-12 (emphasis added).

Thacher discloses counting of "men" or tries and determining whether it reached to zero ("the counter exceeds a threshold").

> "The data appearing on address and control bus 16 also includes signals relating to confirmation of the start of the game, which can be used to define the end of the game (i.e. that **the count of "men" or tries has been decremented** to zero) signals…"

Id, 11:52-56 (emphasis added). It is understood that a disclosure of decrementing a counter teaches incrementing the counter.

Thacher further discloses counting the number of games played ("threshold") and determines the end of the game.

> "At the end of the time of the tournament the attendant keys a "tournament over" code into keyboard 12, which is transmitted via terminal 11 into computer 6. Alternatively the central computer can cause each game to utilize an internal software timer to **determine the end of each game**, (or if desired, could **count games played and determine the end of the tournament based on the number played**). The central computer sorts the scores identifying the player number (and player name if previously stored with the code), and determines the winner."

Id, 8:12-22 (emphasis added).

Thacher discloses displaying at each of the video games ("user interface") a winner announcement ("information") regarding a use of the video games ("product") at the end of the game.

> "apparatus for **displaying the winning score and/or announcement display**s at all the games."

Id, 4:25-27 (emphasis added).

Thacher also discloses other data messages ("information regarding a use of the product") of future tournament or advertisement or other displays to the video games ("product").

> "**Data messages** are sent from any of the central computers to lower ranks of computers or to the video games themselves, constituting **announcements of winners, of future tournaments, advertisements** or other displays."

Id, 3:67-4:3 (emphasis added).

Claim 27 next recites and Thacher discloses "*storing an input received from the user interface on a device*." **Ex. PAT-A**, '565 Patent, 92:13-14 (emphasis added).

Thacher discloses an internal memory of the electronic game for storing data signals relating to scores ("input").

> "Another embodiment of the invention is a tournament system comprising **an electronic game including an internal memory for storing at least score data signals relating to scores achieved on the game**, at predetermined memory locations, a data link to a central computer, apparatus for reading the score data stored at the predetermined memory locations, and apparatus for transmitting the score data to the data link for transmission to the central computer."

Ex. PA-C, Thacher, 4:62-5:2 (emphasis added).

Thacher discloses game scores ("input") entered by a player.

> "the validated player could **enter his score manually on a keyboard associated with the video game**."

Id, 3:3-5 (emphasis added).

Claim 27 next recites and Thacher discloses "*transmitting the input to a server*." **Ex. PAT-A**, '565 Patent, 92:15 (emphasis added).

Thacher discloses transmitting the game score ("input", *e.g.*, score entered by a validated player) to a central computer ("server").

> "Another embodiment of the invention is a tournament system comprising an electronic game including an internal memory for storing at least score data signals relating to scores achieved on the game, at predetermined memory locations, a data link to a central computer, apparatus for reading the score data stored at the predetermined memory locations, and apparatus for **transmitting the score data to the data link for transmission to the central computer**."

Ex. PA-C, Thacher, 4:62-5:2 (emphasis added).

v. <u>Claim 28</u>

Claim 28 should be rejected under 35 U.S.C. § 102(e) as unpatentable over Thacher. Requestor provides a concise statement of the substantial new question of patentability for Claim 28 based on Thacher under 35 U.S.C. § 102(e).

Please see attached Exhibit CC-C for a claim chart comparing Thacher with Claim 28 of the '565 Patent under 35 U.S.C. § 102(e)

Claim 28 recites and Thacher discloses "*[t]he tangible computer readable medium of claim 27*." **Ex. PAT-A**, '565 Patent, 92:16 (emphasis added). As shown in Section VII.A.3.u, Thacher discloses the tangible computer readable medium of claim 27.

Claim 28 next recites and Thacher discloses that "*the monitoring further includes: monitoring the product for an occurrence in the product of a second trigger event of the predefined plurality of trigger events*." *Id.*, 92:17-20 (emphasis added).

Thacher discloses monitoring the count of "men" or attempts ("second trigger event").

> "The data appearing on address and control bus 16 also includes signals relating to confirmation of the start of the game, which can be used to define the end of

> the game (i.e. that **the count of "men" or tries has been decremented** to zero) signals,"

Ex. PA-C, Thacher, 11:52-56, emphasis added.

Claim 28 next recites and Thacher discloses "*incrementing a value of a second counter corresponding to the second trigger event upon detection of the occurrence of the second trigger event in the product*." **Ex. PAT-A**, '565 Patent, 92:21-23 (emphasis added).

Thacher discloses decrementing the "men" or attempts using a "second counter". It is understood that a disclosure of decrementing a counter teaches incrementing the counter.

> "The data appearing on address and control bus 16 also includes signals relating to confirmation of the start of the game, which can be used to define the end of the game (i.e. that **the count of "men" or tries has been decremented** to zero) signals,"

Ex. PA-C, Thacher, 11:52-56, emphasis added.

w. <u>Claim 29</u>

Claim 29 should be rejected under 35 U.S.C. § 102(e) as unpatentable over Thacher. Requestor provides a concise statement of the substantial new question of patentability for Claim 29 based on Thacher under 35 U.S.C. § 102(e).

Please see attached Exhibit CC-C for a claim chart comparing Thacher with Claim 29 of the '565 Patent under 35 U.S.C. § 102(e)

Claim 29 recites and Thacher discloses "*[t]he tangible computer readable medium of claim 27 [sic]*." **Ex. PAT-A**, '565 Patent, 92:24 (emphasis added). As shown in Section VII.A.3.v, Thacher discloses the tangible computer readable medium of claim 28.

Claim 29 next recites and Thacher discloses that "*storing the second counter on the device*." *Id.*, 92:25-26 (emphasis added).

Thacher discloses storing the value of the "men" or attempts ("second counter") to compare with the predetermined code signals.

> "When the game has been completed, a code signal or signals identifying the end of the game appears on the address and control bus 16 from the video game. This can be for example the **decremented value of game "men" or attempts**, or the like. **This signal is identified in comparators 28, which had stored therein the predetermined code signals designating "end of game"** which were initially downloaded into RAM 26A."

Ex. PA-C, Thacher, 14:52-59, emphasis added.

Claim 29 next recites and Thacher discloses "*transmitting the value of the second counter to the server*." **Ex. PAT-A**, '565 Patent, 92:27 (emphasis added).

Thacher discloses that that data appearing on the control bus includes game signals such as the count of "men" or tries ("value of the second counter"). It is understood that the data appearing on the control bus is transmitted to the central computer.

> "**The data appearing on address and control bus 16 also includes signals** relating to confirmation of the start of the game, which can be used to define the end of the game (i.e. that **the count of "men" or tries has been decremented** to zero) signals,"

Ex. PA-C, Thacher, 11:52-56, emphasis added.

x. <u>Claim 30</u>

Claim 30 should be rejected under 35 U.S.C. § 102(e) as unpatentable over Thacher. Requestor provides a concise statement of the substantial new question of patentability for Claim 30 based on Thacher under 35 U.S.C. § 102(e).

Please see attached Exhibit CC-C for a claim chart comparing Thacher with Claim 30 of the '565 Patent under 35 U.S.C. § 102(e)

Claim 30 recites and Thacher discloses "[A] physical unit, comprising: means for monitoring a product for an occurrence in the product of a trigger event of a predefined plurality of trigger events." **Ex. PAT-A**, '565 Patent, 92:28-31 (emphasis added).

Thacher discloses a video game machine ("physical unit").

> "The player then inserts his credit card into a credit card reader of any of the **video game machines** connected to the system."

Ex. PA-C, Thacher, 2:53-55 (emphasis added).

Thacher discloses a game terminal ("product") for playing electronic games.

> "In addition, a **remote terminal 11**, having a keyboard 12 connected thereto is connected to the central computer 6. The **terminal 11** can be one merely having limited memory, utilizing memory of the central computer 6, or can be a so-called smart terminal, containing its own substantial memory and processing power. Alternatively in some instances it may be desirable to have the **terminal 11** with keyboard 12 connected to the central computer by telephone line, CATV cable or other data link."

Id., 6:7-16 (emphasis added).

Thacher discloses displaying scores ("monitoring … of a trigger event of a predefined plurality of trigger events") of games on the player's game terminal ("product").

> "apparatus for **displaying the scores** locally at the games…"

Id., 4:8 (emphasis added).

Thacher also discloses monitoring the start and end of a game ("trigger event of a predefined plurality of trigger events").

> "The data appearing on address and control bus 16 also includes **signals relating to confirmation of the start of the game**, which can be used to define the end of the game (i.e. that the count of "men" or tries has been decremented to zero) signals, and other such supervisory and controlling information."

Id., 11:52-57 (emphasis added).

> "When the game has been completed, **a code signal or signals identifying the end of the game** appears on the address and control bus 16 from the video game. This can be for example the decremented value of game "men" or attempts, or the

> like. This signal is identified in comparators 28, which had stored therein the predetermined code signals designating "end of game" which were initially downloaded into RAM 26A."

Id., 14:52-59 (emphasis added).

Thacher also discloses sensing ("monitoring") the end of a game ("trigger event of a predefined plurality of trigger events").

> "When a display has been downloaded in RAM 28 from central computer 6, microprocessor 31 can **sense the end of the game** as described earlier (or can force the end of the game) by applying a signal via bus 23 and peripheral interface adaptor 27 to apply a control signal on lead 54 to multiplexer 50, to switch so that the R, G, B and SYNC outputs of dematrix 49 pass to output port 53 instead of the R, G, B and SYNC inputs from input 52. **End of game signals** eventually normally will appear on the bus as if a game had been left unfinished."

Id., 16:9-18 (emphasis added). From these disclosures, Thacher discloses a predefined plurality of trigger events (*e.g.*, counting game scores, counting "men" or tries, detecting a start of a game, detecting an end of a game).

Claim 30 next recites and Thacher discloses "*means for incrementing a counter corresponding to the trigger event upon detection of the occurrence of the trigger event*." **Ex. PAT-A**, '565 Patent, 92:32-34 (emphasis added).

Thacher discloses incrementing score data ("counter") as the player plays a game.

> "The **score data** is stored in interface 3 as it **increments**."

Ex. PA-C, Thacher, 8:1-2 (emphasis added).

Thacher also discloses decrements the count of "men" or attempts ("counter").

> "The data appearing on address and control bus 16 also includes signals relating to confirmation of the start of the game, which can be used to define the end of the game (i.e. that **the count of "men" or tries** has been decremented to zero) signals…"

Id., 11:52-56 (emphasis added). It is understood that a disclosure of decrementing a counter teaches incrementing the counter.

Claim 30 next recites and Thacher discloses "*means for probing for information regarding a use of the product if the counter exceeds a threshold*." **Ex. PAT-A**, '565 Patent, 92:35-36 (emphasis added).

Thacher discloses that the video game machine ("means for probing") counts "men" or tries and determines whether it reached to zero ("counter exceeds a threshold").

> "The data appearing on address and control bus 16 also includes signals relating to confirmation of the start of the game, which can be used to define the end of the game (i.e. that **the count of "men" or tries has been decremented to zero**) signals…"

Ex. PA-C, Thacher, 11:52-56 (emphasis added). It is understood that a disclosure of decrementing a counter teaches incrementing the counter.

Thacher discloses displaying at the end of the game ("if the counter exceeds a threshold") at each of the video games a winner announcement ("information regarding a use") of the video games ("product").

> "Central computer 6 then initiates transmission of **a winner announcement signal to each of the video games**."

Id., 8:22-24 (emphasis added).

Thacher also discloses that other data messages ("information regarding a use of the product") of future tournament or advertisement or other displays to the video games ("product").

> "**Data** messages are sent from any of the central computers to lower ranks of computers or to the video games themselves, constituting **announcements of winners, of future tournaments, advertisements** or other displays."

Id., 3:67-4:3 (emphasis added).

Claim 30 next recites and Thacher discloses "*means for storing an input received from the means for probing*." **Ex. PAT-A**, '565 Patent, 92:37-38 (emphasis added).

Thacher discloses an internal memory of the electronic game for storing data signals relating to scores ("input").

> "Another embodiment of the invention is a tournament system comprising **an electronic game including an internal memory for storing at least score data signals relating to scores achieved on the game**, at predetermined memory locations, a data link to a central computer, apparatus for reading the score data stored at the predetermined memory locations, and apparatus for transmitting the score data to the data link for transmission to the central computer."

Ex. PA-C, Thacher, 4:62-5:2 (emphasis added).

Thacher discloses game scores ("input") entered by a player.

> "the validated player could **enter his score manually on a keyboard associated with the video game**."

Id., 3:3-5 (emphasis added). It is understood that the validated player's entry of the score is received from the video game terminal ("means for probing").

Claim 30 next recites and Thacher discloses "*means for transmitting the input to a server*." **Ex. PAT-A**, '565 Patent, 92:39 (emphasis added).

Thacher discloses transmitting game scores ("input", *e.g.*, score entered by a validated player) to a central computer ("server").

> "Another embodiment of the invention is a tournament system comprising an electronic game including an internal memory for storing at least score data signals relating to scores achieved on the game, at predetermined memory locations, a data link to a central computer, apparatus for reading the score data stored at the predetermined memory locations, and apparatus for **transmitting the score data to the data link for transmission to the central computer**."

Ex. PA-C, Thacher, 4:62-5:2 (emphasis added).

y. <u>Claim 31</u>

Claim 31 should be rejected under 35 U.S.C. § 102(e) as unpatentable over Thacher. Requestor provides a concise statement of the substantial new question of patentability for Claim 31 based on Thacher under 35 U.S.C. § 102(e).

Please see attached Exhibit CC-C for a claim chart comparing Thacher with Claim 31 of the '565 Patent under 35 U.S.C. § 102(e)

Claim 31 recites and Thacher discloses "*[t]he unit of claim 30*." **Ex. PAT-A**, '565 Patent, 92:40 (emphasis added). As shown in Section VII.A.3.x, Thacher discloses the unit of claim 30.

Claim 31 next recites and Thacher discloses "*means for monitoring the product for an occurrence in the product of a second trigger event of the predefined plurality of trigger events*." *Id.*, 92:41-43 (emphasis added).

Thacher discloses monitoring the count of "men" or attempts ("second trigger event").

> "The data appearing on address and control bus 16 also includes signals relating to confirmation of the start of the game, which can be used to define the end of the game (i.e. that **the count of "men" or tries has been decremented** to zero) signals,"

Ex. PA-C, Thacher, 11:52-56, emphasis added.

Claim 31 next recites and Thacher discloses "*means for incrementing a value of a second counter corresponding to the second trigger event upon detection of the occurrence of the second trigger event in the product*." **Ex. PAT-A**, '565 Patent, 92:44-46 (emphasis added).

Thacher discloses decrementing the "men" or attempts using a "second counter". It is understood that a disclosure of decrementing a counter teaches incrementing the counter.

> "The data appearing on address and control bus 16 also includes signals relating to confirmation of the start of the game, which can be used to define the end of the game (i.e. that **the count of "men" or tries has been decremented** to zero) signals,"

Ex. PA-C, Thacher, 11:52-56, emphasis added.

z. <u>Claim 32</u>

Claim 32 should be rejected under 35 U.S.C. § 102(e) as unpatentable over Thacher. Requestor provides a concise statement of the substantial new question of patentability for Claim 32 based on Thacher under 35 U.S.C. § 102(e).

Please see attached Exhibit CC-C for a claim chart comparing Thacher with Claim 32 of the '565 Patent under 35 U.S.C. § 102(e)

Claim 32 recites and Thacher discloses "*[t]he unit of claim 30 [sic]*." **Ex. PAT-A**, '565 Patent, 92:47 (emphasis added). As shown in Section VII.A.3.y, Thacher discloses the unit of claim 31.

Claim 32 next recites and Thacher discloses "*means for storing the second counter on the device*." *Id.*, 92:48 (emphasis added).

Thacher discloses storing the value of the "men" or attempts ("second counter") to compare with the predetermined code signals.

> "When the game has been completed, a code signal or signals identifying the end of the game appears on the address and control bus 16 from the video game. This can be for example the **decremented value of game "men" or attempts**, or the like. **This signal is identified in comparators 28, which had stored therein the predetermined code signals designating "end of game"** which were initially downloaded into RAM 26A."

Ex. PA-C, Thacher, 14:52-59, emphasis added.

Claim 32 next recites and Thacher discloses "*means for transmitting the value of the second counter to the server*." **Ex. PAT-A**, '565 Patent, 92:49-50 (emphasis added).

Thacher discloses that that data appearing on the control bus includes game signals such as the count of "men" or tries ("value of the second counter"). It is understood that the data appearing on the control bus is transmitted to the central computer.

> "**The data appearing on address and control bus 16 also includes signals** relating to confirmation of the start of the game, which can be used to define the end of the game (i.e. that **the count of "men" or tries has been decremented** to zero) signals,"

Ex. PA-C, Thacher, 11:52-56, emphasis added.

4. Anticipated By Manduley Under 35 U.S.C. § 102(e)

a. Claim 1

Claim 1 should be rejected under 35 U.S.C. § 102(e) as unpatentable over Manduley. Requestor provides a concise statement of the substantial new question of patentability for Claim 1 based on Manduley under 35 U.S.C. § 102(e).

Please see attached Exhibit CC-D for a claim chart comparing Manduley with Claim 1 of the '565 Patent under 35 U.S.C. § 102(e)

Claim 1 recites and Manduley discloses *"[a] unit, comprising: a memory; a transmitter; and a processor*." **Ex. PAT-A**, '565 Patent, 90:14-17 (emphasis added).

Manduley discloses a data processing device ("unit").

> "**Device 20** includes CPU **22**, which may be a conventional microprocessor. Connected to CPU **22** are a plurality of memory devices **24-1** through **24-N**. Memory devices **24** may include, for example, program memory ROMs, detachable PROMM paddles, working RAMs, fixed and/or floppy disk drives, CD ROM drives, etc. It will be appreciated that at least some of the memory devices are read/write memory while others may be read only."

Ex. PA-D, Manduley, 3:34-41 (emphasis added).

Manduley discloses that the data processing device has a plurality of memory devices ("memory") and program memory ROMS ("memory").

> "Device **20** includes CPU **22**, which may be a conventional microprocessor. Connected to CPU **22** are **a plurality of memory devices 24-1** through **24-N**. Memory devices **24** may include, for example, **program memory ROMs**, detachable PROMM paddles, working RAMs, fixed and/or floppy disk drives, CD ROM drives, etc. It will be appreciated that at least some of the memory devices are read/write memory while others may be read only."

Id., 3:34-41 (emphasis added).

Manduley discloses that the data processing device has a data communication interface ("transmitter").

> "Also connected to CPU 22 is **a data communication interface 32**, which may be a conventional modem, and which is capable of establishing a data communication path (represented by arrow 34) between device 20 and another data processing system (not shown)."

Id., 3:52-56 (emphasis added).

Manduley discloses that the data processing device has a CPU ("processor").

> "Device **20** includes **CPU 22**, which may be a conventional **microprocessor**. Connected to CPU **22** are a plurality of memory devices **24-1** through **24-N**. Memory devices **24** may include, for example, program memory ROMs, detachable PROMM paddles, working RAMs, fixed and/or floppy disk drives, CD ROM drives, etc. It will be appreciated that at least some of the memory devices are read/write memory while others may be read only."

Id., 3:34-41 (emphasis added).

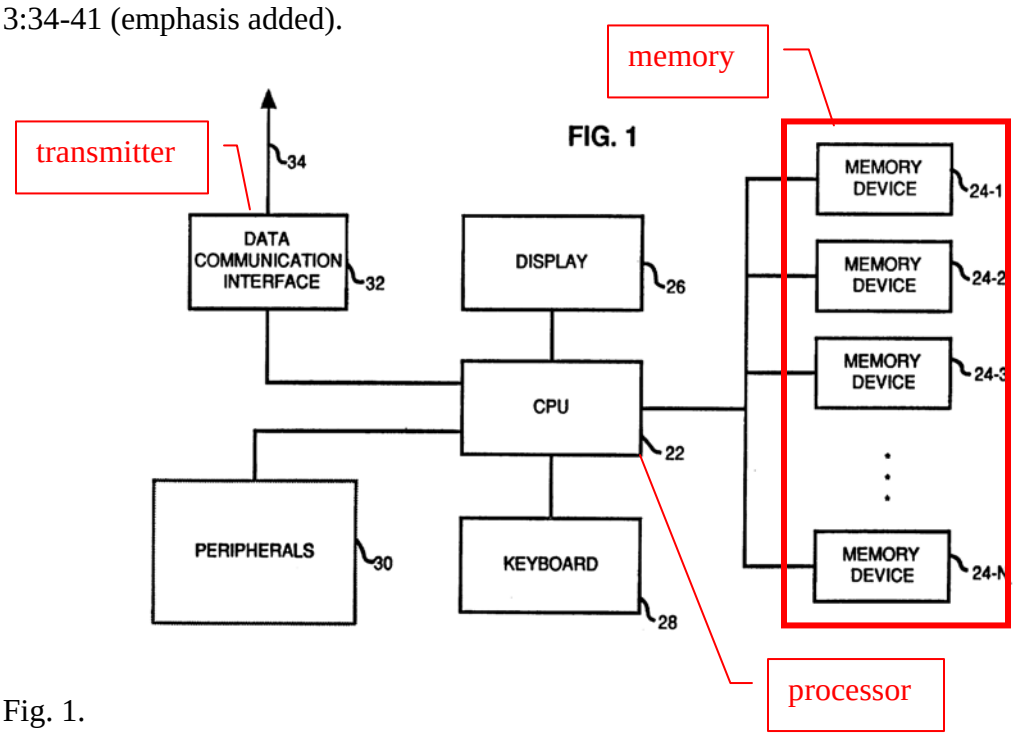

Id., Fig. 1.

Claim 1 next recites and Manduley discloses "*a processor, coupled to the memory and to the transmitter*." **Ex. PAT-A**, '565 Patent, 90:17-18 (emphasis added).

Manduley discloses that the CPU ("processor") is connected to the memory devices ("memory").

"**Connected to CPU 22 are a plurality of memory devices 24-1 through 24-N**." **Ex. PA-D**, Manduley, 3:35-36 (emphasis added).

Manduley discloses that the CPU ("processor") is connected to the data communication interface ("transmitter").

> "**Also connected to CPU 22 is a data communication interface 32**, which may be a conventional modem, and which is capable of establishing a data communication path (represented by arrow 34) between device 20 and another data processing system (not shown)."

Id., 3:52-56 (emphasis added).

Claim 1 next recites and Manduley discloses "*[the processor … configured to] monitor a product for an occurrence in the product of a trigger event of a predefined plurality of trigger events*." **Ex. PAT-A**, '565 Patent, 90:17-21 (emphasis added).

Manduley discloses measuring usage ("occurrence in the product of a trigger event") of an application program that runs on the device ("product").

> "Second, temporary activation has, for the most part, been described on the assumption that **the amount of permitted usage of the feature is based on a quantity of usage**. For example, the usage could be measured in terms of **number of transactions** processed, or in dollar-amount of shipping charges calculated, number of sessions, total duration of sessions, number of users, total distances of goods shipped, total weight of goods shipped, number of reports printed or any other **measurable quantity related to the operation of device 20**."

Ex. PA-D, Manduley, 8:63-9:5 (emphasis added).

Manduley discloses measuring the time period and expiration of the activated feature of the application program ("occurrence in the product of a trigger event") running in the device ("product").

"It is also contemplated that the temporary activation could be for a fixed **time**

> **period**, i.e. **expiring at a fixed deadline**. In that case, device **20** preferably includes a clock/calendar mechanism for indicating the current data and time; preferably, the activation map is automatically updated to end the temporary activation when the deadline passes."

Id., 9:5-10 (emphasis added).

Claim 1 next recites and Manduley discloses "*[the processor … configured to] increment a counter corresponding to the trigger event upon detection of the occurrence of the trigger event*." **Ex. PAT-A**, '565 Patent, 90:22-23 (emphasis added).

Manduley discloses updating a usage counter ("incrementing a counter") that increments corresponding to the usage of the activated feature ("trigger event").

> "Returning now to step 110, if activation of the requested feature was found to be temporary, program activation module 58 **updates a usage counter** with respect to the requested feature to account for the requested use of the feature (step 114)."

Ex. PA-D, Manduley, 5:45-49 (emphasis added).

Manduley also discloses a clock/calendar mechanism ("counter") that indicates date and time that correspond to the usage of the activated feature ("trigger event").

> "It is also contemplated that the temporary activation could be for a fixed time period, i.e. expiring at a fixed deadline. In that case, device **20** preferably includes a **clock/calendar mechanism** for indicating the current date and time; preferably, the activation map is automatically updated to end the temporary activation when the deadline passes."

Id., 9:5-10 (emphasis added).

Claim 1 next recites and Manduley discloses "*[the processor … configured to] cause the display of a user interface, configured to probe for information regarding a use of the product, if the counter exceeds a threshold*." **Ex. PAT-A**, '565 Patent, 90:24-26 (emphasis added).

Manduley discloses a display and a keyboard ("user interface").

> "Also connected to CPU 22 is **a display 26 and a keyboard 28**."

Ex. PA-D, Manduley, 3:42-43 (emphasis added).

Manduley discloses displaying menu items ("the display of a user interface") that indicate the number of usage or time ("information regarding a use") of the features ("product").

> "With respect to at least some of the features available for activation, there may be **menu items that indicate** that either temporary or permanent activation is available. If the user selects temporary activation, there may be menu items that indicate such options as **the number of times the feature will be made available for use, or a length of time during which the feature will be available**."

Id., 6:15-21 (emphasis added).

Manduley discloses indicating the number of allowed usages of the activated feature ("information regarding a use of the product").

> "The [feature selected] has been temporarily activated. Please note that **only X more uses of this feature are authorized** under the temporary activation."

Id., 9:17-19 (emphasis added).

Manduley discloses comparing the usage counter with the amount of usage allowed ("threshold").

> "Program activation module then **compares the updated usage counter with the amount of usage allowed**, as stored in the activation map (step 116)".

Id., 5:49-51 (emphasis added).

Manduley also discloses displaying a warning to the user that indicates the number of remaining authorized uses ("information regarding a use of the product")and/or approaching deadline ("if the counter exceeds a threshold").

> "The **warning may then go on to advise the user** how permanent or further temporary activation may be requested. Of course, in the case of a limited duration temporary activation, the warning would refer to the **approaching deadline rather than the number of remaining authorized uses**."

Id., 9:20-25 (emphasis added).

Manduley discloses displaying a warning to the user ("a user interface") if the permitted duration of quantity of usage will soon expire or exhausted ("the counter exceeds a threshold").

> "Third, it may be desirable to **warn the user if the permitted duration or quantity of usage will soon expire or be exhausted**. Accordingly, step **116** of FIG. 3-B may include a test as to whether such a warning is appropriate. If so, a warning such as the following is to be displayed on display **26**:"

Id., 9:11-16 (emphasis added).

Claim 1 next recites and Manduley discloses "*[the processor … configured to] cause the memory to store an input received from the user interface*." **Ex. PAT-A**, '565 Patent, 90:27-28 (emphasis added).

Manduley discloses storing an user input to the device ("device").

> "Block **40** represents user interface software that **allows the user to input data** into, and control, device **20** and to receive information from device **20**."

Ex. PA-D, Manduley, 3:59-61 (emphasis added).

Claim 1 next recites and Manduley discloses "*[the processor … configured to] cause the transmitter to transmit the input to a server*." **Ex. PAT-A**, '565 Patent, 90:29 (emphasis added).

Manduley discloses transmitting the user input data to a data center ("server").

> "Following step **150** is step **152**, at which the integrated request code is **transmitted from device 20 to the data center**."

Ex. PA-D, Manduley, 7:24-26 (emphasis added).

b. <u>Claim 2</u>

Claim 2 should be rejected under 35 U.S.C. § 102(e) as unpatentable over Manduley. Requestor provides a concise statement of the substantial new question of patentability for Claim 2 based on Manduley under 35 U.S.C. § 102(e).

Please see attached Exhibit CC-D for a claim chart comparing Manduley with Claim 2 of the '565 Patent under 35 U.S.C. § 102(e)

Claim 2 recites "*[t]he unit of claim 1*." **Ex. PAT-A**, '565 Patent, 90:30 (emphasis added). As shown in Section VII.A.4.a, Manduley discloses the unit of claim 1.

Claim 2 next recites and Manduley discloses that "*the input reflects a request to schedule maintenance.*" *Id.*, 90:30-31 (emphasis added).

Manduley discloses receiving request codes ("request") from users.

> "FIGS. 4-A and 4-B illustrate a software routine for controlling a data center to **receive request codes from users** or devices 20 and to transmit activation codes to users or devices 20. Such a data center may be maintained, for example, by a company that manufactures or markets devices 20."

Ex. PA-D, Manduley, 7:39-44 (emphasis added).

Manduley discloses updating maintenance agreement ("request to schedule maintenance").

> "Step 220, where appropriate, also includes updating of any applicable **maintenance agreement** or product leasing arrangement." (8:21-23)

It is understood from these teachings of Manduley that the user's request can contain a request to schedule maintenance.

c. <u>Claim 3</u>

Claim 3 should be rejected under 35 U.S.C. § 102(e) as unpatentable over Manduley. Requestor provides a concise statement of the substantial new question of patentability for Claim 3 based on Manduley under 35 U.S.C. § 102(e).

Please see attached Exhibit CC-D for a claim chart comparing Manduley with Claim 3 of the '565 Patent under 35 U.S.C. § 102(e)

Claim 3 recites "*[t]he unit of claim 1.*" **Ex. PAT-A**, '565 Patent, 90:32 (emphasis added). As shown in Section VII.A.4.a, Manduley discloses the unit of claim 1.

Claim 3 next recites and Manduley discloses that "*the input reflects a submission of a purchase order.*" *Id.*, 90:32-33 (emphasis added).

Manduley discloses ordering a hardware ("a purchase order").

> "If at step 130 it was determined that hardware not part of or connected to device 20 is required for the requested feature or application, program activation module 58 then generates a code that represents **an order for the necessary hardware** (step 132)."

Ex. PA-D, Manduley, 6:35-39 (emphasis added).

d. <u>Claim 4</u>

Claim 4 should be rejected under 35 U.S.C. § 102(e) as unpatentable over Manduley. Requestor provides a concise statement of the substantial new question of patentability for Claim 4 based on Manduley under 35 U.S.C. § 102(e).

Please see attached Exhibit CC-D for a claim chart comparing Manduley with Claim 4 of the '565 Patent under 35 U.S.C. § 102(e)

Claim 4 recites "*[t]he unit of claim 1*." **Ex. PAT-A**, '565 Patent, 90:34 (emphasis added). As shown in Section VII.A.4.a, Manduley discloses the unit of claim 1.

Claim 4 next recites and Manduley discloses that "*the input reflects a request for interactive assistance*." *Id.*, 90:34-35 (emphasis added).

Manduley discloses that the user's request ("request") causes displaying to the user instructions and list of features and/or application requested for activation ("interactive assistance").

> "…step 140 follows, at which **device 20 displays to the user instructions** for calling a data center. After step 140 is step 142 at which system 20 **displays a list of the features and/or applications requested for activation by the user**. That list also preferably includes all the hardware which is being ordered because it is required for operation of the requested features or applications."

Ex. PA-D, Manduley, 6:53-60 (emphasis added).

e. <u>Claim 5</u>

Claim 5 should be rejected under 35 U.S.C. § 102(e) as unpatentable over Manduley. Requestor provides a concise statement of the substantial new question of patentability for Claim 5 based on Manduley under 35 U.S.C. § 102(e).

Please see attached Exhibit CC-D for a claim chart comparing Manduley with Claim 5 of the '565 Patent under 35 U.S.C. § 102(e)

Claim 5 recites and Manduley discloses "*[t]he unit of claim 1*." **Ex. PAT-A**, '565 Patent, 90:36 (emphasis added). As shown in Section VII.A.4.a, Manduley discloses the unit of claim 1.

Claim 5 next recites and Manduley discloses that "*the processor is further configured to: monitor the product for an occurrence in the product of a second trigger event of the predefined plurality of trigger events*." *Id.*, 90:36-40 (emphasis added).

Manduley discloses a clock/calendar mechanism that indicates date and time ("second trigger event") corresponding to the usage of the activated feature.

> "It is also contemplated that the temporary activation could be for a fixed time period, i.e. expiring at a fixed deadline. In that case, device **20** preferably includes a **clock/calendar mechanism for indicating the current date and time**; preferably, the activation map is automatically updated to end the temporary activation when the deadline passes."

Ex. PA-D, Manduley, 9:5-10 (emphasis added). Manduley also discloses that the usage of a feature could be measured in terms of any measurable quantity related to the operation of the device ("product") in addition to the amount of permitted usage ("trigger event" of claim 1).

> "...temporary activation has, for the most part, been described on the assumption that the amount of permitted usage of the feature is based on a quantity of usage. For example, **the usage could be measured in terms of number of transactions processed, or dollar-amount of shipping charges calculated, number of sessions, total duration of sessions, number of users, total distances of goods shipped, total weight of goods shipped, number of reports printed or any other measurable quantity related to the operation of device 20**."

Id., 8:63-9:5 (emphasis added).

Claim 5 next recites and Manduley discloses that "[*the processor is further configured to:] increment a second counter corresponding to the second trigger event upon detection of the occurrence of the second trigger event in the product*." **Ex. PAT-A**, '565 Patent, 90:41-43 (emphasis added).

Manduley discloses that the clock/calendar mechanism ("second counter") measures elapsed date and time that correspond to the usage of the activated feature ("occurrence of the second trigger event").

> "It is also contemplated that the temporary activation could be for a fixed time period, i.e. expiring at a fixed deadline. In that case, device **20** preferably includes a **clock/calendar mechanism for indicating the current date and time**; preferably, the activation map is automatically updated to end the temporary activation when the deadline passes."

Ex. PA-D, Manduley, 9:5-10 (emphasis added). Manduley also discloses measuring quantities related to the operation ("occurrence of the second trigger event"). It is understood that these quantities can be measured using a "second counter."

> "...temporary activation has, for the most part, been described on the assumption that the amount of permitted usage of the feature is based on a quantity of usage. For example, **the usage could be measured in terms of number of transactions processed, or dollar-amount of shipping charges calculated, number of sessions, total duration of sessions, number of users, total distances of goods shipped, total weight of goods shipped, number of reports printed or any other measurable quantity related to the operation of device 20**."

Id., 8:63-9:5 (emphasis added).

f. <u>Claim 6</u>

Claim 6 should be rejected under 35 U.S.C. § 102(e) as unpatentable over Manduley. Requestor provides a concise statement of the substantial new question of patentability for Claim 6 based on Manduley under 35 U.S.C. § 102(e).

Please see attached Exhibit CC-D for a claim chart comparing Manduley with Claim 6 of the '565 Patent under 35 U.S.C. § 102(e)

Claim 6 recites and Manduley discloses "*[t]he unit of claim 5*." **Ex. PAT-A**, '565 Patent, 90:44 (emphasis added). As shown in Section VII.A.4.e, Manduley discloses the unit of claim 5.

Claim 6 next recites and Manduley discloses that "*the processor is further configured to: cause the memory to store the second counter*." *Id.*, 90:44-46 (emphasis added).

Manduley discloses the clock/calendar mechanism ("second counter") indicating the current data and time determines the end of the temporary activation. It is understood that the current data and time is stored in the memory.

> "It is also contemplated that the temporary activation could be for a fixed time period, i.e. expiring at a fixed deadline. In that case, device **20** preferably includes a **clock/calendar mechanism for indicating the current date and time**; preferably, the activation map is automatically updated to end the temporary activation when the deadline passes."

Ex. PA-D, Manduley, 9:5-10 (emphasis added). Manduley also discloses that the measurable quantities ("second counter") are used to determine the end of the temporary activation. It is understood that these measurable quantities are stored in the memory.

> "...temporary activation has, for the most part, been described on the assumption that the amount of permitted usage of the feature is based on a quantity of usage. For example, the usage could be measured in terms of **number of transactions processed**, or **dollar-amount of shipping charges calculated**, **number of sessions**, **total duration of sessions**, **number of users**, **total distances of goods shipped**, **total weight of goods shipped**, **number of reports printed or any other measurable quantity related to the operation of device 20**."

Id., 8:63-9:5 (emphasis added).

Manduley also discloses storing in an activation map usage counters including a "second counter" that measures the measurable quantities.

> "Program activation module then compares **the updated usage counter with the amount of usage allowed, as stored in the activation map** (step 116)".

Ex. PA-D, Manduley, 5:49-51 (emphasis added).

Claim 6 next recites and Manduley discloses that "[*the processor is further configured to:] cause the transmitter to transmit a value of the second counter*." **Ex. PAT-A**, '565 Patent, 90:47-48 (emphasis added).

Manduley discloses an activation map.

> "Program activation module then compares **the updated usage counter with the amount of usage allowed, as stored in the activation map** (step 116)".

Ex. PA-D, Manduley, 5:49-51 (emphasis added).

Manduley discloses that the activation map including the updated usage counter of the measurable quantities ("a value of the second counter") is automatically updated.

> "It is also contemplated that the temporary activation could be for a fixed time period, i.e. expiring at a fixed deadline. In that case device 20 preferably includes a clock/calendar mechanism for indicating the current date and time; preferably, the **activation map is automatically updated to end the temporary activation when the deadline passes**."

Id., 9:5-10 (emphasis added).

Manduley discloses transmitting the request code to a data center ("server"). It is understood that the request code can contain the measurable quantities ("a value of the second counter").

> "Following step **150** is step **152**, at which the integrated **request code is transmitted from device 20 to the data center**."

Id., 7:24-26 (emphasis added).

g. <u>Claim 8</u>

Claim 8 should be rejected under 35 U.S.C. § 102(e) as unpatentable over Manduley. Requestor provides a concise statement of the substantial new question of patentability for Claim 8 based on Manduley under 35 U.S.C. § 102(e).

Please see attached Exhibit CC-D for a claim chart comparing Manduley with Claim 8 of the '565 Patent under 35 U.S.C. § 102(e)

Claim 8 recites "*[t]he unit of claim 1*." **Ex. PAT-A**, '565 Patent, 90:53 (emphasis added). As shown in Section VII.A.4.a, Manduley discloses the unit of claim 1.

Claim 8 next recites and Manduley discloses that "*one of the predefined plurality of trigger events is a problem associated with the product.*" *Id.*, 90:53-55 (emphasis added).

Manduley discloses finding an error in decrypting the request code ("problem associated with the product").

> "Following step 210 is step 212, at which it is determined whether **an error is found** by reference to the customer's file or **in decrypting the request code**. If so, step 214 follows, at which the data center **issues an error message** (either by direct communication to device 20 or to the user via the voice answer back unit, as the case may be) and the routine ends."

Ex. PA-D, Manduley, 8:6-12 (emphasis added).

h. <u>Claim 9</u>

Claim 9 should be rejected under 35 U.S.C. § 102(e) as unpatentable over Manduley. Requestor provides a concise statement of the substantial new question of patentability for Claim 9 based on Manduley under 35 U.S.C. § 102(e).

Please see attached Exhibit CC-D for a claim chart comparing Manduley with Claim 9 of the '565 Patent under 35 U.S.C. § 102(e)

Claim 9 recites "*[t]he method [sic] of claim 8*." **Ex. PAT-A**, '565 Patent, 90:56 (emphasis added). As shown in Section VII.A.4.g, Manduley discloses the unit of claim 8.

Claim 9 next recites and Manduley discloses that "*the problem is an equipment problem.*" *Id.*, 90:56-57 (emphasis added).

Manduley discloses determining a hardware (*e.g.*, printer, peripheral") is required ("equipment problem") for a requested application or feature.

> "Module 58 then proceeds to step 130, at which it is **determined whether all hardware required for the requested application or feature** is connected to or included in device 20. For example, if the requested feature was the envelope printing feature of addressing program 46, program activation module 58 refers to the configuration record to **determined whether an envelope printer is one of peripherals 30**."

Ex. PA-D, Manduley, 6:28-34 (emphasis added).

i. <u>Claim 10</u>

Claim 10 should be rejected under 35 U.S.C. § 102(e) as unpatentable over Manduley. Requestor provides a concise statement of the substantial new question of patentability for Claim 10 based on Manduley under 35 U.S.C. § 102(e).

Please see attached Exhibit CC-D for a claim chart comparing Manduley with Claim 10 of the '565 Patent under 35 U.S.C. § 102(e)

Claim 10 recites "*[t]he unit of claim 1*." **Ex. PAT-A**, '565 Patent, 90:58 (emphasis added). As shown in Section VII.A.4.a, Manduley discloses the unit of claim 1.

Claim 10 next recites and Manduley discloses that "*a trigger event of the predefined plurality of trigger events is a use of at least one product feature*." *Id.*, 90:58-60 (emphasis added).

Manduley discloses that the usage counter's incrementing ("trigger event") is use of the application or feature ("product feature").

> "Returning now to step 110, if activation of the requested feature was found to be temporary, program activation module 58 updates **a usage counter** with respect to the requested feature to account for the requested **use of the feature** (step 114)."

Ex. PA-D, Manduley, 5:45-49 (emphasis added).

j. <u>Claim 11</u>

Claim 11 should be rejected under 35 U.S.C. § 102(e) as unpatentable over Manduley. Requestor provides a concise statement of the substantial new question of patentability for Claim 11 based on Manduley under 35 U.S.C. § 102(e).

Please see attached Exhibit CC-D for a claim chart comparing Manduley with Claim 11 of the '565 Patent under 35 U.S.C. § 102(e)

Claim 11 recites "*[t]he method [sic] of claim 10*." **Ex. PAT-A**, '565 Patent, 90:61 (emphasis added). As shown in Section VII.A.4.i, Manduley discloses the unit of claim 10.

Claim 11 next recites and Manduley discloses that "*the at least one product feature is "undo"*." *Id.*, 90:61-62 (emphasis added).

Manduley discloses deactivating the requested application or feature.

> "Otherwise, the routine proceeds to step 120, at which the **activation map is altered to indicate that the requested feature is no longer activated**."

Ex. PA-D, Manduley, 5:55-57 (emphasis added).

k. <u>Claim 13</u>

Claim 13 should be rejected under 35 U.S.C. § 102(e) as unpatentable over Manduley. Requestor provides a concise statement of the substantial new question of patentability for Claim 13 based on Manduley under 35 U.S.C. § 102(e).

Please see attached Exhibit CC-D for a claim chart comparing Manduley with Claim 13 of the '565 Patent under 35 U.S.C. § 102(e)

Claim 13 recites "*[t]he unit of claim 1*." **Ex. PAT-A**, '565 Patent, 90:65 (emphasis added). As shown in Section VII.A.4.a, Manduley discloses the unit of claim 1.

Claim 13 next recites and Manduley discloses that "*a cellular telephone*." *Id.*, 90:65-66 (emphasis added).

Manduley discloses a cellular telephone.

> "Communication via conventional telephone, or alternatively **cellular telephone** or other wireless communication is contemplated."

Ex. PA-D, Manduley, 7:22-24 (emphasis added).

l. <u>Claim 14</u>

Claim 14 should be rejected under 35 U.S.C. § 102(e) as unpatentable over Manduley. Requestor provides a concise statement of the substantial new question of patentability for Claim 14 based on Manduley under 35 U.S.C. § 102(e).

Please see attached Exhibit CC-D for a claim chart comparing Manduley with Claim 14 of the '565 Patent under 35 U.S.C. § 102(e)

Claim 14 recites "*[t]he unit of claim 1*." **Ex. PAT-A**, '565 Patent, 91:1 (emphasis added). As shown in Section VII.A.4.a, Manduley discloses the unit of claim 1.

Claim 14 next recites and Manduley discloses that "*the processor is further configured to increment the counter corresponding to the trigger event upon detection of a second occurrence of the trigger event*." *Id.*, 91:1-4 (emphasis added).

Manduley discloses a clock/calendar mechanism. It is understood that the time counter has a minute counter and a second counter; the minute counter increments at the 60th occurrence ("second occurrence of the trigger event") of the second counter.

> "It is also contemplated that the temporary activation could be for a fixed time period, i.e. expiring at a fixed deadline. In that case, device **20** preferably includes a **clock/calendar mechanism** for indicating the **current date and time**; preferably, the activation map is automatically updated to end the temporary activation when the deadline passes."

Ex. PA-D, Manduley, 9:5-10 (emphasis added).

m. <u>Claim 15</u>

Claim 15 should be rejected under 35 U.S.C. § 102(e) as unpatentable over Manduley. Requestor provides a concise statement of the substantial new question of patentability for Claim 15 based on Manduley under 35 U.S.C. § 102(e).

Please see attached Exhibit CC-D for a claim chart comparing Manduley with Claim 15 of the '565 Patent under 35 U.S.C. § 102(e)

Claim 15 recites and Manduley discloses *"[A] method, comprising: monitoring a product for an occurrence in the product of a trigger event of a predefined plurality of trigger events*." **Ex. PAT-A**, '565 Patent, 91:5-7 (emphasis added).

Manduley discloses a data processing device ("product").

> "**Device 20** includes CPU **22**, which may be a conventional microprocessor. Connected to CPU **22** are a plurality of memory devices **24-1** through **24-N**. Memory devices **24** may include, for example, program memory ROMs, detachable PROMM paddles, working RAMs, fixed and/or floppy disk drives, CD ROM drives, etc. It will be appreciated that at least some of the memory devices are read/write memory while others may be read only."

Ex. PA-D, Manduley, 3:34-41 (emphasis added).

Manduley discloses measuring usage ("monitoring a occurrence in the product of a trigger event") of an application program that runs on the device ("product").

> "Second, temporary activation has, for the most part, been described on the assumption that **the amount of permitted usage of the feature is based on a quantity of usage**. For example, the usage could be measured in terms of **number of transactions** processed, or in dollar-amount of shipping charges calculated, number of sessions, total duration of sessions, number of users, total distances of goods shipped, total weight of goods shipped, number of reports printed or any other **measurable quantity related to the operation of device 20**."

Id., 8:63-9:5 (emphasis added).

Manduley discloses measuring the time period and expiration of the activated feature of the application program ("occurrence in the product of a trigger event") running in the device ("product").

> "It is also contemplated that the temporary activation could be for a fixed **time period**, i.e. **expiring at a fixed deadline**. In that case, device **20** preferably includes a clock/calendar mechanism for indicating the current data and time; preferably, the activation map is automatically updated to end the temporary activation when the deadline passes."

Id., 9:5-10 (emphasis added).

Claim 15 next recites and Manduley discloses "*incrementing a counter corresponding to the trigger event upon detection of the occurrence of the trigger event in the product*." **Ex. PAT-A**, '565 Patent, 91:8-10 (emphasis added).

Manduley discloses updating a usage counter ("incrementing a counter") that increments corresponding to the usage of the activated feature ("trigger event").

> "Returning now to step 110, if activation of the requested feature was found to be temporary, program activation module 58 **updates a usage counter** with respect to the requested feature to account for the requested use of the feature (step 114)."

Ex. PA-D, Manduley, 5:45-49 (emphasis added).

Manduley also discloses a clock/calendar mechanism ("counter") that indicates date and time that correspond to the usage of the activated feature ("trigger event").

> "It is also contemplated that the temporary activation could be for a fixed time period, i.e. expiring at a fixed deadline. In that case, device **20** preferably includes a **clock/calendar mechanism** for indicating the current date and time; preferably, the activation map is automatically updated to end the temporary activation when the deadline passes."

Id., 9:5-10 (emphasis added).

Claim 15 next recites and Manduley discloses "*displaying a user interface, configured to probe for information regarding a use of the product, if the counter exceeds a threshold*." **Ex. PAT-A**, '565 Patent, 91:11-13 (emphasis added).

Manduley discloses a display and a keyboard ("user interface").

"Also connected to CPU 22 is **a display 26 and a keyboard 28**."

Ex. PA-D, Manduley, 3:42-43 (emphasis added).

Manduley discloses displaying menu items ("displaying a user interface") that indicate the number of usage or time ("information regarding a use") of the application program running on the device ("product").

> "With respect to at least some of the features available for activation, there may be **menu items that indicate** that either temporary or permanent activation is available. If the user selects temporary activation, there may be menu items that indicate such options as **the number of times the feature will be made available for use, or a length of time during which the feature will be available**."

Id., 6:15-21 (emphasis added).

Manduley discloses indicating the number of allowed usages of the activated feature ("information regarding a use of the product").

> "The [feature selected] has been temporarily activated. Please note that **only X more uses of this feature are authorized** under the temporary activation."

Id., 9:17-19 (emphasis added).

Manduley discloses comparing the usage counter with the amount of usage allowed ("threshold").

> "Program activation module then **compares the updated usage counter with the amount of usage allowed**, as stored in the activation map (step 116)".

Id., 5:49-51 (emphasis added).

Manduley also discloses displaying a warning to the user that indicates the number of remaining authorized uses ("information regarding a use of the product")and/or approaching deadline ("if the counter exceeds a threshold").

> "The **warning may then go on to advise the user** how permanent or further temporary activation may be requested. Of course, in the case of a limited duration temporary activation, the warning would refer to the **approaching**

deadline rather than the number of remaining authorized uses."

Id., 9:20-25 (emphasis added).

Manduley discloses displaying a warning to the user ("a user interface") if the permitted duration of quantity of usage will soon expire or exhausted ("the counter exceeds a threshold").

> "Third, it may be desirable to **warn the user if the permitted duration or quantity of usage will soon expire or be exhausted**. Accordingly, step **116** of FIG. 3-B may include a test as to whether such a warning is appropriate. If so, a warning such as the following is to be displayed on display **26**:"

Id., 9:11-16 (emphasis added).

Claim 15 next recites and Manduley discloses "*storing an input received from the user interface on a device*." **Ex. PAT-A**, '565 Patent, 91:14-15 (emphasis added).

Manduley discloses storing an user input to the device ("device").

> "Block **40** represents user interface software that **allows the user to input data** into, and control, device **20** and to receive information from device **20**."

Ex. PA-D, Manduley, 3:59-61 (emphasis added).

Claim 15 next recites and Manduley discloses "*transmitting the input to a server*." **Ex. PAT-A**, '565 Patent, 91:16 (emphasis added).

Manduley discloses transmitting the user input data to a data center ("server").

> "Following step **150** is step **152**, at which the integrated request code is **transmitted from device 20 to the data center**."

Ex. PA-D, Manduley, 7:24-26 (emphasis added).

n. <u>Claim 17</u>

Claim 17 should be rejected under 35 U.S.C. § 102(e) as unpatentable over Manduley. Requestor provides a concise statement of the substantial new question of patentability for Claim 17 based on Manduley under 35 U.S.C. § 102(e).

Please see attached Exhibit CC-D for a claim chart comparing Manduley with Claim 17 of the '565 Patent under 35 U.S.C. § 102(e)

Claim 17 recites and Manduley discloses "*[t]he method of claim 15*." **Ex. PAT-A**, '565 Patent, 91:20 (emphasis added). As shown in Section VII.A.4.m, Manduley discloses the method of claim 15.

Claim 17 next recites and Manduley discloses "*monitoring the product for an occurrence in the product of a second trigger event of the predefined plurality of trigger events*." *Id.*, 91:21-23 (emphasis added).

Manduley discloses a clock/calendar mechanism that indicates date and time ("second trigger event") corresponding to the usage of the activated feature.

> "It is also contemplated that the temporary activation could be for a fixed time period, i.e. expiring at a fixed deadline. In that case, device **20** preferably includes a **clock/calendar mechanism for indicating the current date and time**; preferably, the activation map is automatically updated to end the temporary activation when the deadline passes."

Ex. PA-D, Manduley, 9:5-10 (emphasis added). Manduley also discloses that the usage of a feature could be measured in terms of any measurable quantity related to the operation of the device ("product") in addition to the amount of permitted usage ("trigger event" of claim 1).

> "...temporary activation has, for the most part, been described on the assumption that the amount of permitted usage of the feature is based on a quantity of usage. For example, **the usage could be measured in terms of number of transactions processed, or dollar-amount of shipping charges calculated, number of sessions, total duration of sessions, number of users, total distances of goods shipped, total weight of goods shipped, number of reports printed or any other measurable quantity related to the operation of device 20**."

Id., 8:63-9:5 (emphasis added).

Claim 17 next recites and Manduley discloses that "*incrementing a value of a second counter corresponding to the second trigger event upon detection of the second trigger event in the product*." **Ex. PAT-A**, '565 Patent, 91:24-26 (emphasis added).

Manduley discloses that the clock/calendar mechanism ("second counter") measures elapsed date and time that correspond to the usage of the activated feature ("occurrence of the second trigger event").

> "It is also contemplated that the temporary activation could be for a fixed time period, i.e. expiring at a fixed deadline. In that case, device **20** preferably includes a **clock/calendar mechanism for indicating the current date and time**; preferably, the activation map is automatically updated to end the temporary activation when the deadline passes."

Ex. PA-D, Manduley, 9:5-10 (emphasis added). Manduley also discloses measuring quantities related to the operation ("occurrence of the second trigger event"). It is understood that these quantities can be measured using a "second counter."

> "...temporary activation has, for the most part, been described on the assumption that the amount of permitted usage of the feature is based on a quantity of usage. For example, **the usage could be measured in terms of number of transactions processed, or dollar-amount of shipping charges calculated, number of sessions, total duration of sessions, number of users, total distances of goods shipped, total weight of goods shipped, number of reports printed or any other measurable quantity related to the operation of device 20**."

Id., 8:63-9:5 (emphasis added).

o. <u>Claim 18</u>

Claim 18 should be rejected under 35 U.S.C. § 102(e) as unpatentable over Manduley. Requestor provides a concise statement of the substantial new question of patentability for Claim 18 based on Manduley under 35 U.S.C. § 102(e).

Please see attached Exhibit CC-D for a claim chart comparing Manduley with Claim 18 of the '565 Patent under 35 U.S.C. § 102(e)

Claim 18 recites and Manduley discloses "*[t]he method of claim 17*." **Ex. PAT-A**, '565 Patent, 91:27 (emphasis added). As shown in Section VII.A.4.n, Manduley discloses the method of claim 17.

Claim 18 next recites and Manduley discloses that "*storing the second counter on the device*." *Id.*, 91:28 (emphasis added).

Manduley discloses the clock/calendar mechanism ("second counter") indicating the current data and time determines the end of the temporary activation. It is understood that the current data and time is stored in the memory.

> "It is also contemplated that the temporary activation could be for a fixed time period, i.e. expiring at a fixed deadline. In that case, device **20** preferably includes a **clock/calendar mechanism for indicating the current date and time**; preferably, the activation map is automatically updated to end the temporary activation when the deadline passes."

Ex. PA-D, Manduley, 9:5-10 (emphasis added). Manduley also discloses that the measurable quantities ("second counter") are used to determine the end of the temporary activation. It is understood that these measurable quantities are stored in the memory.

> "...temporary activation has, for the most part, been described on the assumption that the amount of permitted usage of the feature is based on a quantity of usage. For example, the usage could be measured in terms of **number of transactions processed**, or **dollar-amount of shipping charges calculated**, **number of sessions**, **total duration of sessions**, **number of users**, **total distances of goods shipped**, **total weight of goods shipped**, **number of reports printed or any other measurable quantity related to the operation of device 20**."

Id., 8:63-9:5 (emphasis added).

Manduley also discloses storing in an activation map usage counters including a "second counter" that measures the measurable quantities.

> "Program activation module then compares **the updated usage counter with the amount of usage allowed, as stored in the activation map** (step 116)".

Ex. PA-D, Manduley, 5:49-51 (emphasis added).

Claim 18 next recites and Manduley discloses "*transmitting a value of the second counter to the server*." **Ex. PAT-A**, '565 Patent, 91:29 (emphasis added).

Manduley discloses an activation map.

> "Program activation module then compares **the updated usage counter with the amount of usage allowed, as stored in the activation map** (step 116)".

Ex. PA-D, Manduley, 5:49-51 (emphasis added).

Manduley discloses that the activation map including the updated usage counter of the measurable quantities ("a value of the second counter") is automatically updated.

> "It is also contemplated that the temporary activation could be for a fixed time period, i.e. expiring at a fixed deadline. In that case device 20 preferably includes a clock/calendar mechanism for indicating the current date and time; preferably, the **activation map is automatically updated to end the temporary activation when the deadline passes**."

Id., 9:5-10 (emphasis added).

Manduley discloses transmitting the request code to a data center ("server"). It is understood that the request code can contain the measurable quantities ("a value of the second counter").

> "Following step **150** is step **152**, at which the integrated **request code is transmitted from device 20 to the data center**."

Id., 7:24-26 (emphasis added).

p. <u>Claim 19</u>

Claim 19 should be rejected under 35 U.S.C. § 102(e) as unpatentable over Manduley. Requestor provides a concise statement of the substantial new question of patentability for Claim 19 based on Manduley under 35 U.S.C. § 102(e).

Please see attached Exhibit CC-D for a claim chart comparing Manduley with Claim 19 of the '565 Patent under 35 U.S.C. § 102(e)

Claim 19 recites "*[t]he method of claim 15*." **Ex. PAT-A**, '565 Patent, 91:30 (emphasis added). As shown in Section VII.A.4.m, Manduley discloses the method of claim 15.

Claim 19 next recites and Manduley discloses that "*one of the predefined plurality of trigger events is a problem associated with the product*." *Id.*, 91:30-32 (emphasis added).

Manduley discloses finding an error in decrypting the request code ("problem associated with the product").

> "Following step 210 is step 212, at which it is determined whether **an error is found** by reference to the customer's file or **in decrypting the request code**. If so, step 214 follows, at which the data center **issues an error message** (either by direct communication to device 20 or to the user via the voice answer back unit, as the case may be) and the routine ends."

Ex. PA-D, Manduley, 8:6-12 (emphasis added).

q. <u>Claim 21</u>

Claim 21 should be rejected under 35 U.S.C. § 102(e) as unpatentable over Manduley. Requestor provides a concise statement of the substantial new question of patentability for Claim 21 based on Manduley under 35 U.S.C. § 102(e).

Please see attached Exhibit CC-D for a claim chart comparing Manduley with Claim 21 of the '565 Patent under 35 U.S.C. § 102(e)

Claim 21 recites "*[t]he method of claim 19*." **Ex. PAT-A**, '565 Patent, 91:36 (emphasis added). As shown in Section VII.A.4.p, Manduley discloses the method of claim 19.

Claim 21 next recites and Manduley discloses that "*the problem is an equipment problem*." *Id.*, 91:36-37 (emphasis added).

Manduley discloses determining a hardware (*e.g.*, printer, peripheral") is required ("equipment problem") for a requested application or feature.

> "Module 58 then proceeds to step 130, at which it is **determined whether all hardware required for the requested application or feature** is connected to or

> included in device 20. For example, if the requested feature was the envelope printing feature of addressing program 46, program activation module 58 refers to the configuration record to **determined whether an envelope printer is one of peripherals 30**."

Ex. PA-D, Manduley, 6:28-34 (emphasis added).

r. <u>Claim 22</u>

Claim 22 should be rejected under 35 U.S.C. § 102(e) as unpatentable over Manduley. Requestor provides a concise statement of the substantial new question of patentability for Claim 22 based on Manduley under 35 U.S.C. § 102(e).

Please see attached Exhibit CC-D for a claim chart comparing Manduley with Claim 22 of the '565 Patent under 35 U.S.C. § 102(e)

Claim 22 recites "*[t]he method of claim 15*." **Ex. PAT-A**, '565 Patent, 91:39 (emphasis added). As shown in Section VII.A.4.m, Manduley discloses the method of claim 15.

Claim 22 next recites and Manduley discloses that "*one of the predefined plurality of trigger events is a use of at least one product feature*." *Id.*, 91:39-41 (emphasis added).

Manduley discloses that the usage counter's incrementing ("trigger event") is use of the application or feature ("product feature").

> "Returning now to step 110, if activation of the requested feature was found to be temporary, program activation module 58 updates **a usage counter** with respect to the requested feature to account for the requested **use of the feature** (step 114)."

Ex. PA-D, Manduley, 5:45-49 (emphasis added).

s. <u>Claim 25</u>

Claim 25 should be rejected under 35 U.S.C. § 102(e) as unpatentable over Manduley. Requestor provides a concise statement of the substantial new question of patentability for Claim 25 based on Manduley under 35 U.S.C. § 102(e).

Please see attached Exhibit CC-D for a claim chart comparing Manduley with Claim 25 of the '565 Patent under 35 U.S.C. § 102(e)

Claim 25 recites "*[t]he method of claim 15*." **Ex. PAT-A**, '565 Patent, 91:46 (emphasis added). As shown in Section VII.A.4.m, Manduley discloses the method of claim 15.

Claim 25 next recites and Manduley discloses that "*the product is a cellular telephone*." *Id.*, 91:46-47 (emphasis added).

Manduley discloses a cellular telephone.

> "Communication via conventional telephone, or alternatively **cellular telephone** or other wireless communication is contemplated."

Ex. PA-D, Manduley, 7:22-24 (emphasis added).

t. <u>Claim 26</u>

Claim 26 should be rejected under 35 U.S.C. § 102(e) as unpatentable over Manduley. Requestor provides a concise statement of the substantial new question of patentability for Claim 26 based on Manduley under 35 U.S.C. § 102(e).

Please see attached Exhibit CC-D for a claim chart comparing Manduley with Claim 26 of the '565 Patent under 35 U.S.C. § 102(e)

Claim 26 recites "*[t]he method of claim 15*." **Ex. PAT-A**, '565 Patent, 91:48 (emphasis added). As shown in Section VII.A.4.m, Manduley discloses the method of claim 15.

Claim 26 next recites and Manduley discloses "*further comprising: incrementing the counter corresponding to the trigger event upon detection of a second occurrence of the trigger event in the product*." *Id.*, 91:48-51 (emphasis added).

Manduley discloses a clock/calendar mechanism. It is understood that the time counter has a minute counter and a second counter; the minute counter increments at the 60th occurrence ("second occurrence of the trigger event") of the second counter.

> "It is also contemplated that the temporary activation could be for a fixed time period, i.e. expiring at a fixed deadline. In that case, device **20** preferably includes a **clock/calendar mechanism** for indicating the **current date and time**; preferably, the activation map is automatically updated to end the temporary activation when the deadline passes."

Ex. PA-D, Manduley, 9:5-10 (emphasis added).

u. <u>Claim 27</u>

Claim 27 should be rejected under 35 U.S.C. § 102(e) as unpatentable over Manduley. Requestor provides a concise statement of the substantial new question of patentability for Claim 27 based on Manduley under 35 U.S.C. § 102(e).

Please see attached Exhibit CC-D for a claim chart comparing Manduley with Claim 27 of the '565 Patent under 35 U.S.C. § 102(e)

Claim 27 recites and Manduley discloses "*[a] tangible computer readable medium having stored thereon, computer executable instructions that, if executed by a computing device, cause the computing device to perform a method*." **Ex. PAT-A**, '565 Patent, 92:1-4 (emphasis added).

Manduley discloses a device ("computing device") that includes memory devices for a program memory ROM ("tangible computer readable medium") that stores application programs ("computer executable instructions").

> "Device **20** includes CPU **22**, which may be a conventional microprocessor. Connected to CPU **22** are a plurality of memory devices **24-1** through **24-N**. Memory devices **24** may include, for example, **program memory ROMs**, detachable PROMM paddles, working RAMs, fixed and/or floppy disk drives, CD ROM drives, etc. It will be appreciated that at least some of the memory devices are read/write memory while others may be read only."

Ex. PA-D, Manduley, 3:34-41 (emphasis added).

Claim 27 recites and Manduley discloses "*monitoring a product for an occurrence in the product of a trigger event of a predefined plurality of trigger events*." **Ex. PAT-A**, '565 Patent, 92:5-6 (emphasis added).

Manduley discloses a data processing device ("product").

> "**Device 20** includes CPU **22**, which may be a conventional microprocessor. Connected to CPU **22** are a plurality of memory devices **24-1** through **24-N**. Memory devices **24** may include, for example, program memory ROMs, detachable PROMM paddles, working RAMs, fixed and/or floppy disk drives, CD ROM drives, etc. It will be appreciated that at least some of the memory devices are read/write memory while others may be read only."

Ex. PA-D, Manduley, 3:34-41 (emphasis added).

Manduley discloses measuring usage ("monitoring a occurrence in the product of a trigger event") of an application program that runs on the device ("product").

> "Second, temporary activation has, for the most part, been described on the assumption that **the amount of permitted usage of the feature is based on a quantity of usage**. For example, the usage could be measured in terms of **number of transactions** processed, or in dollar-amount of shipping charges calculated, number of sessions, total duration of sessions, number of users, total distances of goods shipped, total weight of goods shipped, number of reports printed or any other **measurable quantity related to the operation of device 20**."

Id., 8:63-9:5 (emphasis added).

Manduley discloses measuring the time period and expiration of the activated feature of the application program ("occurrence in the product of a trigger event") running in the device ("product").

> "It is also contemplated that the temporary activation could be for a fixed **time period**, i.e. **expiring at a fixed deadline**. In that case, device **20** preferably includes a clock/calendar mechanism for indicating the current data and time; preferably, the activation map is automatically updated to end the temporary activation when the deadline passes."

Id., 9:5-10 (emphasis added).

Claim 27 next recites and Manduley discloses "*incrementing a counter corresponding to the trigger event upon detection of the occurrence of the trigger event in the product*."

Ex. PAT-A, '565 Patent, 92:7-9 (emphasis added).

Manduley discloses updating a usage counter ("incrementing a counter") that increments corresponding to the usage of the activated feature ("trigger event").

> "Returning now to step 110, if activation of the requested feature was found to be temporary, program activation module 58 **updates a usage counter** with respect to the requested feature to account for the requested use of the feature (step 114)."

Ex. PA-D, Manduley, 5:45-49 (emphasis added).

Manduley also discloses a clock/calendar mechanism ("counter") that indicates date and time that correspond to the usage of the activated feature ("trigger event").

> "It is also contemplated that the temporary activation could be for a fixed time period, i.e. expiring at a fixed deadline. In that case, device **20** preferably includes a **clock/calendar mechanism** for indicating the current date and time; preferably, the activation map is automatically updated to end the temporary activation when the deadline passes."

Id., 9:5-10 (emphasis added).

Claim 27 next recites and Manduley discloses "*displaying a user interface, configured to probe for information regarding a use of the product, if the counter exceeds a threshold*."

Ex. PAT-A, '565 Patent, 92:10-12 (emphasis added).

Manduley discloses a display and a keyboard ("user interface").

> "Also connected to CPU 22 is **a display 26 and a keyboard 28**."

Ex. PA-D, Manduley, 3:42-43 (emphasis added).

Manduley discloses displaying menu items ("displaying a user interface") that indicate the number of usage or time ("information regarding a use") of the application program running on the device ("product").

> "With respect to at least some of the features available for activation, there may

> be **menu items that indicate** that either temporary or permanent activation is available. If the user selects temporary activation, there may be menu items that indicate such options as **the number of times the feature will be made available for use, or a length of time during which the feature will be available**."

Id., 6:15-21 (emphasis added).

Manduley discloses indicating the number of allowed usages of the activated feature ("information regarding a use of the product").

> "The [feature selected] has been temporarily activated. Please note that **only X more uses of this feature are authorized** under the temporary activation."

Id., 9:17-19 (emphasis added).

Manduley discloses comparing the usage counter with the amount of usage allowed ("threshold").

> "Program activation module then **compares the updated usage counter with the amount of usage allowed**, as stored in the activation map (step 116)".

Id., 5:49-51 (emphasis added).

Manduley also discloses displaying a warning to the user that indicates the number of remaining authorized uses ("information regarding a use of the product")and/or approaching deadline ("if the counter exceeds a threshold").

> "The **warning may then go on to advise the user** how permanent or further temporary activation may be requested. Of course, in the case of a limited duration temporary activation, the warning would refer to the **approaching deadline rather than the number of remaining authorized uses**."

Id., 9:20-25 (emphasis added).

Manduley discloses displaying a warning to the user ("a user interface") if the permitted duration of quantity of usage will soon expire or exhausted ("the counter exceeds a threshold").

> "Third, it may be desirable to **warn the user if the permitted duration or quantity of usage will soon expire or be exhausted**. Accordingly, step **116** of FIG. 3-B may include a test as to whether such a warning is appropriate. If so, a warning such as the following is to be displayed on display **26**:"

Id., 9:11-16 (emphasis added).

Claim 27 next recites and Manduley discloses "*storing an input received from the user interface on a device*." **Ex. PAT-A**, '565 Patent, 92:13-14 (emphasis added).

Manduley discloses storing an user input to the device ("device").

> "Block **40** represents user interface software that **allows the user to input data** into, and control, device **20** and to receive information from device **20**."

Ex. PA-D, Manduley, 3:59-61 (emphasis added).

Claim 27 next recites and Manduley discloses "*transmitting the input to a server*." **Ex. PAT-A**, '565 Patent, 92:15 (emphasis added).

Manduley discloses transmitting the user input data to a data center ("server").

> "Following step **150** is step **152**, at which the integrated request code is **transmitted from device 20 to the data center**."

Ex. PA-D, Manduley, 7:24-26 (emphasis added).

v. <u>Claim 28</u>

Claim 28 should be rejected under 35 U.S.C. § 102(e) as unpatentable over Manduley. Requestor provides a concise statement of the substantial new question of patentability for Claim 28 based on Manduley under 35 U.S.C. § 102(e).

Please see attached Exhibit CC-D for a claim chart comparing Manduley with Claim 28 of the '565 Patent under 35 U.S.C. § 102(e)

Claim 28 recites and Manduley discloses "*[t]he tangible computer readable medium of claim 27*." **Ex. PAT-A**, '565 Patent, 92:16 (emphasis added). As shown in Section VII.A.4.u, Manduley discloses the tangible computer readable medium of claim 27.

Claim 28 next recites and Manduley discloses that "*the monitoring further includes: monitoring the product for an occurrence in the product of a second trigger event of the predefined plurality of trigger events*." *Id.*, 92:17-20 (emphasis added).

Manduley discloses a clock/calendar mechanism that indicates date and time ("second trigger event") corresponding to the usage of the activated feature.

> "It is also contemplated that the temporary activation could be for a fixed time period, i.e. expiring at a fixed deadline. In that case, device **20** preferably includes a **clock/calendar mechanism for indicating the current date and time**; preferably, the activation map is automatically updated to end the temporary activation when the deadline passes."

Ex. PA-D, Manduley, 9:5-10 (emphasis added). Manduley also discloses that the usage of a feature could be measured in terms of any measurable quantity related to the operation of the device ("product") in addition to the amount of permitted usage ("trigger event" of claim 1).

> "...temporary activation has, for the most part, been described on the assumption that the amount of permitted usage of the feature is based on a quantity of usage. For example, **the usage could be measured in terms of number of transactions processed, or dollar-amount of shipping charges calculated, number of sessions, total duration of sessions, number of users, total distances of goods shipped, total weight of goods shipped, number of reports printed or any other measurable quantity related to the operation of device 20**."

Id., 8:63-9:5 (emphasis added).

Claim 28 next recites and Manduley discloses "*incrementing a value of a second counter corresponding to the second trigger event upon detection of the occurrence of the second trigger event in the product*." **Ex. PAT-A**, '565 Patent, 92:21-23 (emphasis added).

Manduley discloses that the clock/calendar mechanism ("second counter") measures elapsed date and time that correspond to the usage of the activated feature ("occurrence of the second trigger event").

> "It is also contemplated that the temporary activation could be for a fixed time period, i.e. expiring at a fixed deadline. In that case, device **20** preferably includes a **clock/calendar mechanism for indicating the current date and**

> **time**; preferably, the activation map is automatically updated to end the temporary activation when the deadline passes."

Ex. PA-D, Manduley, 9:5-10 (emphasis added). Manduley also discloses measuring quantities related to the operation ("occurrence of the second trigger event"). It is understood that these quantities can be measured using a "second counter."

> "...temporary activation has, for the most part, been described on the assumption that the amount of permitted usage of the feature is based on a quantity of usage. For example, **the usage could be measured in terms of number of transactions processed, or dollar-amount of shipping charges calculated, number of sessions, total duration of sessions, number of users, total distances of goods shipped, total weight of goods shipped, number of reports printed or any other measurable quantity related to the operation of device 20**."

Id., 8:63-9:5 (emphasis added).

w. <u>Claim 29</u>

Claim 29 should be rejected under 35 U.S.C. § 102(e) as unpatentable over Manduley. Requestor provides a concise statement of the substantial new question of patentability for Claim 29 based on Manduley under 35 U.S.C. § 102(e).

Please see attached Exhibit CC-D for a claim chart comparing Manduley with Claim 29 of the '565 Patent under 35 U.S.C. § 102(e)

Claim 29 recites and Manduley discloses "*[t]he tangible computer readable medium of claim 27 [sic]*." **Ex. PAT-A**, '565 Patent, 92:24 (emphasis added). As shown in Section VII.A.4.v, Manduley discloses the tangible computer readable medium of claim 28.

Claim 29 next recites and Manduley discloses that "*storing the second counter on the device*." *Id.*, 92:25-26 (emphasis added).

Manduley discloses the clock/calendar mechanism ("second counter") indicating the current data and time determines the end of the temporary activation. It is understood that the current data and time is stored in the memory.

> "It is also contemplated that the temporary activation could be for a fixed time period, i.e. expiring at a fixed deadline. In that case, device **20** preferably includes a **clock/calendar mechanism for indicating the current date and time**; preferably, the activation map is automatically updated to end the temporary activation when the deadline passes."

Ex. PA-D, Manduley, 9:5-10 (emphasis added). Manduley also discloses that the measurable quantities ("second counter") are used to determine the end of the temporary activation. It is understood that these measurable quantities are stored in the memory.

> "...temporary activation has, for the most part, been described on the assumption that the amount of permitted usage of the feature is based on a quantity of usage. For example, the usage could be measured in terms of **number of transactions processed**, or **dollar-amount of shipping charges calculated**, **number of sessions**, **total duration of sessions**, **number of users**, **total distances of goods shipped**, **total weight of goods shipped**, **number of reports printed or any other measurable quantity related to the operation of device 20**."

Id., 8:63-9:5 (emphasis added).

Manduley also discloses storing in an activation map usage counters including a "second counter" that measures the measurable quantities.

> "Program activation module then compares **the updated usage counter with the amount of usage allowed, as stored in the activation map** (step 116)".

Ex. PA-D, Manduley, 5:49-51 (emphasis added).

Claim 29 next recites and Manduley discloses "*transmitting the value of the second counter to the server*." **Ex. PAT-A**, '565 Patent, 92:27 (emphasis added).

Manduley discloses an activation map.

> "Program activation module then compares **the updated usage counter with the amount of usage allowed, as stored in the activation map** (step 116)".

Ex. PA-D, Manduley, 5:49-51 (emphasis added).

Manduley discloses that the activation map including the updated usage counter of the measurable quantities ("a value of the second counter") is automatically updated.

> "It is also contemplated that the temporary activation could be for a fixed time

> period, i.e. expiring at a fixed deadline. In that case device 20 preferably includes a clock/calendar mechanism for indicating the current date and time; preferably, the **activation map is automatically updated to end the temporary activation when the deadline passes**."

Id., 9:5-10 (emphasis added).

Manduley discloses transmitting the request code to a data center ("server"). It is understood that the request code can contain the measurable quantities ("a value of the second counter").

> "Following step **150** is step **152**, at which the integrated **request code is transmitted from device 20 to the data center**."

Id., 7:24-26 (emphasis added).

x. <u>Claim 30</u>

Claim 30 should be rejected under 35 U.S.C. § 102(e) as unpatentable over Manduley. Requestor provides a concise statement of the substantial new question of patentability for Claim 30 based on Manduley under 35 U.S.C. § 102(e).

Please see attached Exhibit CC-D for a claim chart comparing Manduley with Claim 30 of the '565 Patent under 35 U.S.C. § 102(e)

Claim 30 recites and Manduley discloses "*[A] physical unit, comprising: means for monitoring a product for an occurrence in the product of a trigger event of a predefined plurality of trigger events*." **Ex. PAT-A**, '565 Patent, 92:28-31 (emphasis added).

Manduley discloses a data processing device ("physical unit").

> "**Device 20** includes CPU **22**, which may be a conventional microprocessor. Connected to CPU **22** are a plurality of memory devices **24-1** through **24-N**. Memory devices **24** may include, for example, program memory ROMs, detachable PROMM paddles, working RAMs, fixed and/or floppy disk drives, CD ROM drives, etc. It will be appreciated that at least some of the memory devices are read/write memory while others may be read only."

Ex. PA-D, Manduley, 3:34-41 (emphasis added).

Manduley discloses measuring usage ("monitoring a occurrence in the product of a trigger event") of an application program that runs on the device ("product").

> "Second, temporary activation has, for the most part, been described on the assumption that **the amount of permitted usage of the feature is based on a quantity of usage**. For example, the usage could be measured in terms of **number of transactions** processed, or in dollar-amount of shipping charges calculated, number of sessions, total duration of sessions, number of users, total distances of goods shipped, total weight of goods shipped, number of reports printed or any other **measurable quantity related to the operation of device 20**."

Id., 8:63-9:5 (emphasis added).

Manduley discloses measuring the time period and expiration of the activated feature of the application program ("occurrence in the product of a trigger event") running in the device ("product").

> "It is also contemplated that the temporary activation could be for a fixed **time period**, i.e. **expiring at a fixed deadline**. In that case, device **20** preferably includes a clock/calendar mechanism for indicating the current data and time; preferably, the activation map is automatically updated to end the temporary activation when the deadline passes."

Id., 9:5-10 (emphasis added).

Claim 30 next recites and Manduley discloses "*means for incrementing a counter corresponding to the trigger event upon detection of the occurrence of the trigger event*." **Ex. PAT-A**, '565 Patent, 92:32-34 (emphasis added).

Manduley discloses updating a usage counter ("incrementing a counter") that increments corresponding to the usage of the activated feature ("trigger event").

> "Returning now to step 110, if activation of the requested feature was found to be temporary, program activation module 58 **updates a usage counter** with respect to the requested feature to account for the requested use of the feature (step 114)."

Ex. PA-D, Manduley, 5:45-49 (emphasis added).

Manduley also discloses a clock/calendar mechanism ("means for incrementing a counter") that indicates date and time that correspond to the usage of the activated feature ("trigger event").

> "It is also contemplated that the temporary activation could be for a fixed time period, i.e. expiring at a fixed deadline. In that case, device **20** preferably includes a **clock/calendar mechanism** for indicating the current date and time; preferably, the activation map is automatically updated to end the temporary activation when the deadline passes."

Id., 9:5-10 (emphasis added).

Claim 30 next recites and Manduley discloses "*means for probing for information regarding a use of the product if the counter exceeds a threshold*." **Ex. PAT-A**, '565 Patent, 92:35-36 (emphasis added).

Manduley discloses displaying menu items ("means for probing for information") that indicate the number of usage or time ("information regarding a use") of the application program running on the device ("product").

> "With respect to at least some of the features available for activation, there may be **menu items that indicate** that either temporary or permanent activation is available. If the user selects temporary activation, there may be menu items that indicate such options as **the number of times the feature will be made available for use, or a length of time during which the feature will be available**."

Id., 6:15-21 (emphasis added).

Manduley discloses indicating the number of allowed usages of the activated feature ("information regarding a use of the product").

> "The [feature selected] has been temporarily activated. Please note that **only X more uses of this feature are authorized** under the temporary activation."

Id., 9:17-19 (emphasis added).

Manduley discloses comparing the usage counter with the amount of usage allowed ("threshold").

> "Program activation module then **compares the updated usage counter with the amount of usage allowed**, as stored in the activation map (step 116)".

Id., 5:49-51 (emphasis added).

Manduley also discloses displaying a warning to the user that indicates the number of remaining authorized uses ("information regarding a use of the product")and/or approaching deadline ("if the counter exceeds a threshold").

> "The **warning may then go on to advise the user** how permanent or further temporary activation may be requested. Of course, in the case of a limited duration temporary activation, the warning would refer to the **approaching deadline rather than the number of remaining authorized uses**."

Id., 9:20-25 (emphasis added).

Manduley discloses displaying a warning to the user ("information regarding a use") if the permitted duration of quantity of usage will soon expire or exhausted ("the counter exceeds a threshold").

> "Third, it may be desirable to **warn the user if the permitted duration or quantity of usage will soon expire or be exhausted**. Accordingly, step **116** of FIG. 3-B may include a test as to whether such a warning is appropriate. If so, a warning such as the following is to be displayed on display **26**:"

Id., 9:11-16 (emphasis added).

Claim 30 next recites and Manduley discloses "*means for storing an input received from the means for probing*." **Ex. PAT-A**, '565 Patent, 92:37-38 (emphasis added).

Manduley discloses storing an user input to the device ("device").

> "Block **40** represents user interface software that **allows the user to input data** into, and control, device **20** and to receive information from device **20**."

Ex. PA-D, Manduley, 3:59-61 (emphasis added).

Claim 30 next recites and Manduley discloses "*means for transmitting the input to a server*." **Ex. PAT-A**, '565 Patent, 92:39 (emphasis added).

Manduley discloses transmitting the user input data to a data center ("server").

> "Following step **150** is step **152**, at which the integrated request code is **transmitted from device 20 to the data center**."

Ex. PA-D, Manduley, 7:24-26 (emphasis added).

y. <u>Claim 31</u>

Claim 31 should be rejected under 35 U.S.C. § 102(e) as unpatentable over Manduley. Requestor provides a concise statement of the substantial new question of patentability for Claim 31 based on Manduley under 35 U.S.C. § 102(e).

Please see attached Exhibit CC-D for a claim chart comparing Manduley with Claim 31 of the '565 Patent under 35 U.S.C. § 102(e)

Claim 31 recites and Manduley discloses "*[t]he unit of claim 30*." **Ex. PAT-A**, '565 Patent, 92:40 (emphasis added). As shown in Section VII.A.4.x, Manduley discloses the unit of claim 30.

Claim 31 next recites and Manduley discloses "*means for monitoring the product for an occurrence in the product of a second trigger event of the predefined plurality of trigger events*." *Id.*, 92:41-43 (emphasis added).

Manduley discloses a clock/calendar mechanism that indicates date and time ("second trigger event") corresponding to the usage of the activated feature.

> "It is also contemplated that the temporary activation could be for a fixed time period, i.e. expiring at a fixed deadline. In that case, device **20** preferably includes a **clock/calendar mechanism for indicating the current date and time**; preferably, the activation map is automatically updated to end the temporary activation when the deadline passes."

Ex. PA-D, Manduley, 9:5-10 (emphasis added). Manduley also discloses that the usage of a feature could be measured in terms of any measurable quantity related to the operation of the device ("product") in addition to the amount of permitted usage ("trigger event" of claim 1).

> "...temporary activation has, for the most part, been described on the assumption

> that the amount of permitted usage of the feature is based on a quantity of usage. For example, **the usage could be measured in terms of number of transactions processed, or dollar-amount of shipping charges calculated, number of sessions, total duration of sessions, number of users, total distances of goods shipped, total weight of goods shipped, number of reports printed or any other measurable quantity related to the operation of device 20**."

Id., 8:63-9:5 (emphasis added).

Claim 31 next recites and Manduley discloses "*means for incrementing a value of a second counter corresponding to the second trigger event upon detection of the occurrence of the second trigger event in the product*." **Ex. PAT-A**, '565 Patent, 92:44-46 (emphasis added).

Manduley discloses that the clock/calendar mechanism ("second counter") measures elapsed date and time that correspond to the usage of the activated feature ("occurrence of the second trigger event").

> "It is also contemplated that the temporary activation could be for a fixed time period, i.e. expiring at a fixed deadline. In that case, device **20** preferably includes a **clock/calendar mechanism for indicating the current date and time**; preferably, the activation map is automatically updated to end the temporary activation when the deadline passes."

Ex. PA-D, Manduley, 9:5-10 (emphasis added). Manduley also discloses measuring quantities related to the operation ("occurrence of the second trigger event"). It is understood that these quantities can be measured using a "second counter."

> "...temporary activation has, for the most part, been described on the assumption that the amount of permitted usage of the feature is based on a quantity of usage. For example, **the usage could be measured in terms of number of transactions processed, or dollar-amount of shipping charges calculated, number of sessions, total duration of sessions, number of users, total distances of goods shipped, total weight of goods shipped, number of reports printed or any other measurable quantity related to the operation of device 20**."

Id., 8:63-9:5 (emphasis added).

z. <u>Claim 32</u>

Claim 32 should be rejected under 35 U.S.C. § 102(e) as unpatentable over Manduley. Requestor provides a concise statement of the substantial new question of patentability for Claim 32 based on Manduley under 35 U.S.C. § 102(e).

Please see attached Exhibit CC-D for a claim chart comparing Manduley with Claim 32 of the '565 Patent under 35 U.S.C. § 102(e)

Claim 32 recites and Manduley discloses "*[t]he unit of claim 30 [sic]*." **Ex. PAT-A**, '565 Patent, 92:47 (emphasis added). As shown in Section VII.A.4.y, Manduley discloses the unit of claim 31.

Claim 32 next recites and Manduley discloses "*means for storing the second counter on the device*." *Id.*, 92:48 (emphasis added).

Manduley discloses the clock/calendar mechanism ("second counter") indicating the current data and time determines the end of the temporary activation. It is understood that the current data and time is stored in the memory.

> "It is also contemplated that the temporary activation could be for a fixed time period, i.e. expiring at a fixed deadline. In that case, device **20** preferably includes a **clock/calendar mechanism for indicating the current date and time**; preferably, the activation map is automatically updated to end the temporary activation when the deadline passes."

Ex. PA-D, Manduley, 9:5-10 (emphasis added). Manduley also discloses that the measurable quantities ("second counter") are used to determine the end of the temporary activation. It is understood that these measurable quantities are stored in the memory.

> "...temporary activation has, for the most part, been described on the assumption that the amount of permitted usage of the feature is based on a quantity of usage. For example, the usage could be measured in terms of **number of transactions processed**, or **dollar-amount of shipping charges calculated**, **number of sessions**, **total duration of sessions**, **number of users**, **total distances of goods shipped**, **total weight of goods shipped**, **number of reports printed or any**

> **other measurable quantity related to the operation of device 20**."

Id., 8:63-9:5 (emphasis added).

Manduley also discloses storing in an activation map usage counters including a "second counter" that measures the measurable quantities.

> "Program activation module then compares **the updated usage counter with the amount of usage allowed, as stored in the activation map** (step 116)".

Ex. PA-D, Manduley, 5:49-51 (emphasis added).

Claim 32 next recites and Manduley discloses "*means for transmitting the value of the second counter to the server*." **Ex. PAT-A**, '565 Patent, 92:49-50 (emphasis added).

Manduley discloses an activation map.

> "Program activation module then compares **the updated usage counter with the amount of usage allowed, as stored in the activation map** (step 116)".

Ex. PA-D, Manduley, 5:49-51 (emphasis added).

Manduley discloses that the activation map including the updated usage counter of the measurable quantities ("a value of the second counter") is automatically updated.

> "It is also contemplated that the temporary activation could be for a fixed time period, i.e. expiring at a fixed deadline. In that case device 20 preferably includes a clock/calendar mechanism for indicating the current date and time; preferably, the **activation map is automatically updated to end the temporary activation when the deadline passes**."

Id., 9:5-10 (emphasis added).

Manduley discloses transmitting the request code to a data center ("server"). It is understood that the request code can contain the measurable quantities ("a value of the second counter").

> "Following step **150** is step **152**, at which the integrated **request code is transmitted from device 20 to the data center**."

Id., 7:24-26 (emphasis added).

5. Anticipated By Hutchins Under 35 U.S.C. § 102(e)

a. Claim 1

Claim 1 should be rejected under 35 U.S.C. § 102(e) as unpatentable over Hutchins. Requestor provides a concise statement of the substantial new question of patentability for Claim 1 based on Hutchins under 35 U.S.C. § 102(e).

Please see attached Exhibit CC-E for a claim chart comparing Hutchins with Claim 1 of the '565 Patent under 35 U.S.C. § 102(e)

Claim1 recites and Hutchins discloses *"[a] unit, comprising: a memory; a transmitter; and a processor*." **Ex. PAT-A**, '565 Patent, 90:14-17 (emphasis added).

Hutchins discloses a local computer connected to a local computer and one or more machine tools (collectively "unit"). The unit is illustrated in Figure 1:

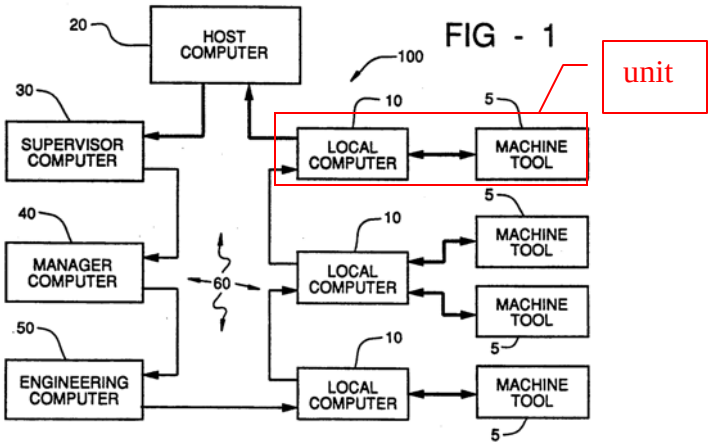

Ex. PA-E, Hutchins, Fig. 1.

Hutchins also discloses that local computer 10 includes central processing unit 11 ("processor"), network interface 12 ("transmitter"), real time clock 13, computer user Interface 14, "memory" including read only memory 16 and random access read/write memory 16, and at least one machine tool interface 17. *Id.*, 6:6-10.

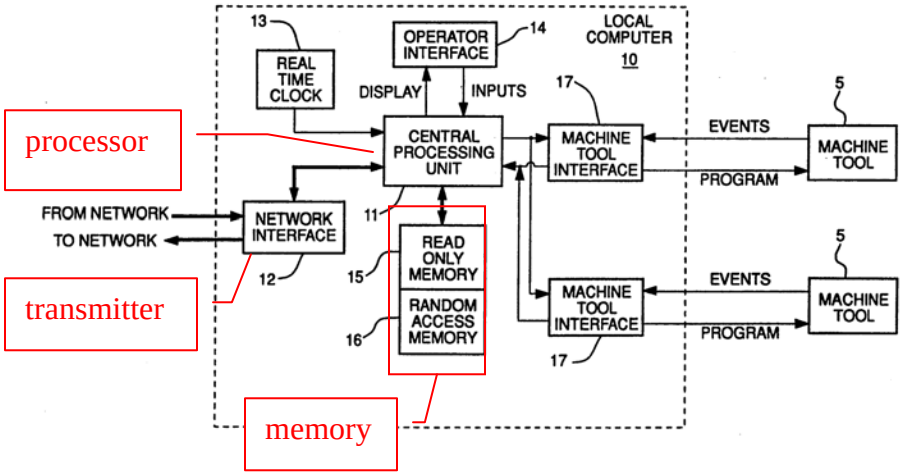

Id., Fig. 3.

Claim 1 next recites and Hutchins discloses *"[the processor … configured to] monitor a product for an occurrence in the product of a trigger event of a predefined plurality of trigger events."* **Ex. PAT-A**, '565 Patent 90:17-21 (emphasis added).

Hutchins discloses a plurality of trigger events including, but not limited to, input from a touch screen display, input from a keyboard, entering a program event, completion of a part program step, and completion of a part program. The computerized machine tool monitors the local computer user interface and the machine tool for the occurrence of one of these trigger events.

> "Of local computer 10 and the corresponding machine tool(s) 5, and input devices, i.e., **touch screen keyboard, buttons that produce input signals** as software interrupts that permit the machine tool operator to direct the operation of the system."

Ex. PA-E, Hutchins, 6:39-43 (emphasis added).

> "A further subprogram under the run machine tool program checks to determine whether a machine tool part program requires the **logging of an event**. This can occur upon supply of particular machine tool part program steps containing significant events to the machine tool 5 or when the machine tool operator has pressed particular control buttons. As will be described below **an event is logged by identifying the type of event, date and time of occurrence and storing this data in an event buffer within random access memory 16**. The logging of an event signals the host communications subprogram that dispatches a message to

host computer 20 via the network 60."

Id., 13:11-23 (emphasis added).

> "When the machine tool operator presses the cycle start button on the machine tool, this loop begins by transmitting the next **program step** to the machine tool (processing block 103). In the initial operation of the machine tool part program this **next program step** is the **first program step**. As previously disclosed, this process takes place via machine tool interface 17, which communicates with machine tool 5."

Id., 14:45-52 (emphasis added).

> "Once this process is complete, then the machine tool operates according to the selected machine tool part program. This process involves a loop that repeats the steps necessary to machine a part until the machine tool **part program is complete**. Completion of the batch of parts involves the execution of the machine tool part program enough times to manufacture the number of parts specified by the batch size."

Id., 14:37-44 (emphasis added).

Claim 1 next recites and Hutchins discloses *"[the processor … configured to] increment a counter corresponding to the trigger event upon detection of the occurrence of the trigger event."* **Ex. PAT-A**, '565 Patent, 90:22-23 (emphasis added).

Hutchins discloses incrementing a program counter after a program step.

> "Subprogram 100 next tests to determine whether the just transmitted program step is at the end of the machine tool part program (decision block 111). If this is not the end of the part program then the **program counter is incremented** (processing block 112)."

Ex. PA-E, Hutchins, 16:3-7 (emphasis added).

Hutchins discloses incrementing a counter after the completion of a part program.

> "Subprogram 100 then tests to determine whether the end of the batch has not been reached then subprogram 100 **increments the batch counter** (processing block 114) and resets the program counter to the beginning of the program (processing block 115).

Id., 16:15-20 (emphasis added).

Hutchins discloses incrementing the program counter (112) and the batch counter (114) as shown in Figure 5:

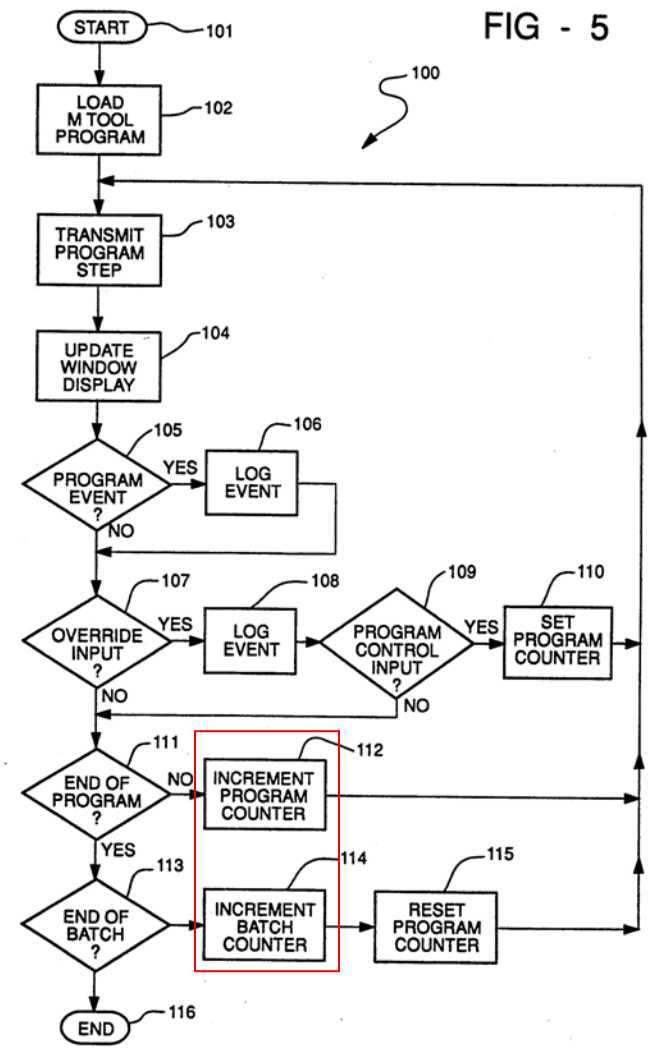

Id., Fig. 5.

Claim 1 next recites and Hutchins discloses *"[the processor … configured to] cause the display of a user interface, configured to probe for information regarding a use of the product, if the counter exceeds a threshold."* **Ex. PAT-A**, '565 Patent, 90:24-26 (emphasis added).

Hutchins discloses a user interface.

> "Local computer 10 includes central processing unit 11, network interface 12, real time clock 13, **computer user interface 14**, memory including read only memory 16 and random access read/write memory 16, and at least one machine tool interface 17."

Ex. PA-E, Hutchins, 6:6-10 (emphasis added).

Hutchins discloses displaying a user interface, configured to probe for information regarding a use of the product.

> "The **computer user interface 14** permits **two way interaction between the machine tool operator and computer** 10. **Computer user interface 14** may include a video display, flat panel display, touch screen, keyboard, or buttons as appropriate and serves as the user interface of local computer 10. The **computer user interface 14** includes a display that produces a visual image corresponding to display signals from central processing unit 11 for the user."

Id., 6:30-38 (emphasis added).

> "Of local computer 10 and the corresponding machine tool(s) 5, and input devices, i.e., touch screen keyboard, buttons that produce **input signals** as software interrupts that permit the machine tool operator to **direct the operation of the system**."

Id., 6:39-43 (emphasis added).

Hutchins discloses a user interface to permit a machine tool operator to record events that include information about the use of the local computer and machine tool.

> "The other type of events reported include operator initiated events at the machine tool. These machine tool operator initiated events include, but are not limited to: **down-loading a machine tool part program to the machine tool; setting the batch size; beginning or ending the operation cycle of the machine tool part program; skipping or deleting operations such as may occur when reworking a work piece; editing the machine tool part program data using the local editing capabilities of the controller; and setting the feed rate override (FRO), spindle speed override (SSO), or the traverse rate override (TRO)**."

Id., 3:16-27 (emphasis added).

Hutchins discloses updating the user interface – window display – as the part program is running.

> "Subprogram 100 signals (sends a message to) the display program to **update a window display** of the operating program (processing block 104)."

Id., 14:54-56 (emphasis added).

Hutchins discloses resetting the user interface when the batch counter exceeds a threshold (signifying the end of a batch). Hutchins next discloses providing a user interface upon the downloading of a machine tool part program.

> "**If the program has completed the end of the batch then subprogram 100 signals host computer 20 that a batch has been completed**. Additional parts may still be made, but they will be made under an exception condition. The final end to the production of this batch of parts occurs after the job cleanup **when the machine tool operator downloads a new machine tool part program for the next batch of parts**."

Id., 16:25-32 (emphasis added).

> "The execution of the machine tool interface subprogram 200 begins via start block 201. The machine tool is in an idle status until the machine tool operator downloads a machine tool part program. This process involves interaction with local computer 10 via computer user interface 14 and communication with host computer 20. The **machine tool operator must select the desired machine tool part program** from those available at host computer 20**.** This is preferably done via a **menu selection process**. Host computer 20 is aware of the identity of the particular local computer 10 and preferably offers the machine tool operator only those machine tool part programs that are proper for use by the corresponding machine tool(s) 5. Upon selection of a particular machine tool part program, host computer 20 transmits this machine tool part program to local computer 10 via computer network 60. Local computer 10 then stores this machine tool part program within random access memory 16. Running of the particular machine tool part program begins at its first program step."

Id., 14:5-25 (emphasis added).

> "The process of running the machine tool part program preferably involves a specification of the batch size. In addition, a batch number for management identification of a particular batch may also be provided. The number of parts in the batch is employed later in control of the machine tool operation. The setting of the batch size and batch I.D. are preferably events signaled to host computer 20. Other data for identification of the job for management reports may also be required. Entry of all this data preferably occurs within processing block 102."

Id., 14:26-36.

> "Once this process is complete, then the machine tool operates according to the selected machine tool part program. This process involves a loop that repeats the steps necessary to machine a part until the machine tool part program is complete.

> Completion of the batch of parts involves the execution of the machine tool part program enough times to manufacture the number of parts specified by the batch size."

Id., 14:37-44.

The user interface is displayed upon completion of a program step after a program counter increments and after the program counter is exceeded.

> "Update Window Display 104"

Id., Fig. 5.

> "Subprogram 100 signals (sends a message to) the display program to **update a window display** of the operating program (processing block 104)."

Id., 14:53-55 (emphasis added).

> "Subprogram 100 next tests to determine whether the just transmitted program step is a programmed significant event (decision block 105)."

Id., 15:1-3 (emphasis added).

> "The present invention also provides the capability for marking other special events in the machine tool part program. An engineer or master machine tool operator charged with debugging or improving a machine tool part program thus may flag particular portions of the program in order to observe its operation during actual manufacture of parts."

Id., 15:12-18 (emphasis added).

> "Whether a program event has been detected, subprogram 100 is signalled (sic) when a machine tool operator initiated event is received (decision block 107)."

Id., 15:29-31 (emphasis added).

Claim 1 next recites and Hutchins discloses *"[the processor … configured to] cause the memory to store an input received from the user interface."* **Ex. PAT-A**, '565 Patent, 90:27-28 (emphasis added).

Hutchins discloses that memory stores the events recorded by the machine tool operator.

> "As will be described below, an event is logged by identifying the type of event, date and time of occurrence and **storing this data in an event buffer within random access memory 16**."

Ex. PA-E, Hutchins, 13:17-20 (emphasis added).

> "If such a program event is detected, then subprogram 100 logs this event (processing block 106). This process involves writing the identity and the date and time of occurrence of this event to the **reserved event buffer within random access memory 16**."

Id., 15:19-23 (emphasis added).

> "Upon detection of any such operator initiated event, the i**dentity and date and time are logged** (processing block 108) in the manner previously described."

Id., 15:47-50 (emphasis added).

Claim 1 next recites and Hutchins discloses *"[the processor … configured to] cause the transmitter to transmit the input to a server."* **Ex. PAT-A**, '565 Patent, 90:29 (emphasis added).

Hutchins discloses transmission of the recorded events stored in random access memory to the host computer ("server").

> "As explained above, a host communication program running on the local computer 10 is signalled (sic) about the logging of such an event and **transmits this event to host computer 20**."

Id., 15:24-28 (emphasis added).

> "Note that the host communications program **transmits any such logged event to host computer 20**."

Id., 15:50-52 (emphasis added).

b. <u>Claim 2</u>

Claim 2 should be rejected under 35 U.S.C. § 102(e) as unpatentable over Hutchins. Requestor provides a concise statement of the substantial new question of patentability for Claim 2 based on Hutchins under 35 U.S.C. § 102(e).

Please see attached Exhibit CC-E for a claim chart comparing Hutchins with Claim 2 of the '565 Patent under 35 U.S.C. § 102(e)

Claim 2 recites "*[t]he unit of claim 1*." **Ex. PAT-A**, '565 Patent, 90:30 (emphasis added). As shown in Section VII.A.5.a, Hutchins discloses the unit of claim 1.

Claim 2 next recites and Hutchins discloses that "*the input reflects a request to schedule maintenance*." *Id.*, 90:30-31 (emphasis added).

Hutchins discloses that the input from the unit of claim 1 is used for maintenance.

> "It has heretofore been proposed to integrate the operation of numerically controlled machine tools into a computer network. The typical reason for construction of such machine tool computer networks is the simplified access to and **maintenance of the machine tool part programs** for the numerically controlled machine tools."

Ex. PA-E, Hutchins, 1:12-17 (emphasis added).

It is understood from these teachings of Hutchins that the operator's request is to schedule maintenance.

c. <u>Claim 5</u>

Claim 5 should be rejected under 35 U.S.C. § 102(e) as unpatentable over Hutchins. Requestor provides a concise statement of the substantial new question of patentability for Claim 5 based on Hutchins under 35 U.S.C. § 102(e).

Please see attached Exhibit CC-E for a claim chart comparing Hutchins with Claim 5 of the '565 Patent under 35 U.S.C. § 102(e)

Claim 5 recites "*[t]he unit of claim 1*." **Ex. PAT-A**, '565 Patent, 90:36 (emphasis added). As shown in Section VII.A.5.a, Hutchins discloses the unit of claim 1.

Claim 5 next recites and Hutchins discloses that "*wherein the processor is further configured to: monitor the product for an occurrence in the product of a second trigger event of the predefined plurality of trigger events*." *Id.***,** 90:36-40 (emphasis added).

Hutchins discloses monitoring the local computer and machine tool for an occurrence in the product of the completion of a program step ("first trigger event") and the completion of a part program ("second trigger event").

> "Subprogram 100 next tests to determine **whether the just transmitted program step** is at the **end of the machine tool part program** (decision block 111). If this is not the end of the part program then the program counter is incremented (processing block 112)."

Ex. PA-E, Hutchins, 16:3-7 (emphasis added).

Claim 5 next recites and Hutchins discloses that *"[the processor is further configured to] increment a second counter corresponding to the second trigger event upon detection of the occurrence of the second trigger event in the product*." **Ex. PAT-A**, '565 Patent, 90:41-43 (emphasis added).

Hutchins discloses incrementing a batch counter upon completion of a part program ("second trigger event").

> "Subprogram 100 then tests to determine whether the end of the batch has been reached. If the batch has not been reached then subprogram 100 i**ncrements the batch counter** (processing block 114) and resets the program counter to the beginning of the program (processing block 115)."

Ex. PA-E, Hutchins, 16:15-20 (emphasis added).

d. <u>Claim 6</u>

Claim 6 should be rejected under 35 U.S.C. § 102(e) as unpatentable over Hutchins. Requestor provides a concise statement of the substantial new question of patentability for Claim 6 based on Hutchins under 35 U.S.C. § 102(e).

Please see attached Exhibit CC-E for a claim chart comparing Hutchins with Claim 6 of the '565 Patent under 35 U.S.C. § 102(e)

Claim 6 recites "*[t]he unit of claim 5*." **Ex. PAT-A,** '565 Patent, 90:44 (emphasis added). As shown in Section VII.A.5.c, Hutchins discloses the unit of claim 5.

Claim 6 next recites and Hutchins discloses that "*wherein the processor is further configured to: cause the memory to store the second counter*" *Id.*, 90:44-46 (emphasis added).

Hutchins discloses a batch counter ("second counter") that is implemented in the local computer.

> "Subprogram 100 then tests to determine whether the end of the batch has been reached. If the batch has not been reached then subprogram 100 i**ncrements the batch counter** (processing block 114) and resets the program counter to the beginning of the program (processing block 115)."

Ex. PA-E, Hutchins, 16:15-20 (emphasis added). It is understood from this disclosure that the second counter is stored in memory.

Claim 6 next recites and Hutchins discloses that *"[the processor is further configured to] cause the transmitter to transmit a value of the second counter."* **Ex. PAT-A**, '565 Patent, 90:47-48 (emphasis added).

Hutchins discloses signaling to the host computer that a batch has been completed ("value of the second counter").

> "The setting of the **batch size and batch I.D.** are preferably **events signaled to host computer 20**."

Ex. PA-E, Hutchins, 14:31-33 (emphasis added).

> If the program has completed the end of the batch then subprogram 100 **signals host computer 20 that a batch has been completed.**

Ex. PA-E, Hutchins, 16:25-27 (emphasis added). It is understood from this disclosure that the value of the second counter is transmitted to the host computer.

e. <u>Claim 7</u>

Claim 7 should be rejected under 35 U.S.C. § 102(e) as unpatentable over Hutchins. Requestor provides a concise statement of the substantial new question of patentability for Claim 7 based on Hutchins under 35 U.S.C. § 102(e).

Please see attached Exhibit CC-E for a claim chart comparing Hutchins with Claim 7 of the '565 Patent under 35 U.S.C. § 102(e)

Claim 7 recites "*[t]he unit of claim 1*." **Ex. PAT-A**, '565 Patent, 90:49 (emphasis added). As shown in Section VII.A.5.a, Hutchins discloses the unit of claim 1.

Claim 7 next recites and Hutchins discloses that "*wherein one trigger event of the predefined plurality of trigger events is an exiting of a feature of the product without a use of the feature.*" *Id.*, 90:49-51 (emphasis added).

Hutchins discloses exiting a tool status display ("exiting a feature of the product") without changing the tool status display ("without a use of the feature").

> "This machine tool status display preferably includes information regarding the current production quantity completed and the completed proportion of the manufacture of the present part. Program 200 tests to determine **whether the computer user desires to exit tool status display** (decision block 205). If the computer user **does not wish to change the tool status display then program** 200 delays for a predetermined polling interval (processing block 206) and refreshes the display with the then current information."

Ex. PA-E, Hutchins, 17:58-67 (emphasis added).

f. <u>Claim 8</u>

Claim 8 should be rejected under 35 U.S.C. § 102(b) as unpatentable over Hutchins. Requestor provides a concise statement of the substantial new question of patentability for Claim 8 based on Hutchins under 35 U.S.C. § 102(b).

Please see attached Exhibit CC-E for a claim chart comparing Hutchins with Claim 8 of the '565 Patent under 35 U.S.C. § 102(e)

Claim 8 recites "*[t]he unit of claim 1*." **Ex. PAT-A**, '565 Patent, 90:52 (emphasis added). As shown in Section VII.A.1.a, Hutchins discloses the unit of claim 1.

Claim 8 next recites and Hutchins discloses that "*one of the predefined plurality of trigger events is a problem associated with the product.*" *Id.*, 90:52-54 (emphasis added).

Hutchins discloses the capability to mark a special event in the machine tool part program such as flagging portions of the program for debugging ("problem associated with the product").

> "The present invention also provides the capability for **marking other special events** in the machine tool part program. An engineer or master machine tool operator charged with **debugging** or improving a machine tool part program thus **may flag particular portions of the program** in order to observe its operation during actual manufacture of parts."

Ex. PA-E, Hutchins, 15:12-18 (emphasis added).

g. <u>Claim 9</u>

Claim 9 should be rejected under 35 U.S.C. § 102(e) as unpatentable over Hutchins. Requestor provides a concise statement of the substantial new question of patentability for Claim 9 based on Hutchins under 35 U.S.C. § 102(e).

Please see attached Exhibit CC-E for a claim chart comparing Hutchins with Claim 9 of the '565 Patent under 35 U.S.C. § 102(e)

Claim 9 recites "*[t]he method [sic] of claim 8*." **Ex. PAT-A**, '565 Patent, 90:55 (emphasis added). As shown in Section VII.A.5.f, Hutchins discloses the unit of claim 8.

Claim 9 next recites and Hutchins discloses that "*the problem is an equipment problem.*" *Id.*, 90:55-56 (emphasis added).

Hutchins discloses the capability to mark a special event in the machine tool part program such as flagging portions of the program for debugging ("problem associated with the product").

> "The present invention also provides the capability for **marking other special events** in the machine tool part program. An engineer or master machine tool operator charged with **debugging** or improving a machine tool part program thus **may flag particular portions of the program** in order to observe its operation during actual manufacture of parts."

Ex. PA-E, Hutchins, 15:12-18 (emphasis added). It is understood the need for debugging could be caused by an equipment problem.

h. <u>Claim 10</u>

Claim 10 should be rejected under 35 U.S.C. § 102(e) as unpatentable over Hutchins. Requestor provides a concise statement of the substantial new question of patentability for Claim 10 based on Hutchins under 35 U.S.C. § 102(e).

Please see attached Exhibit CC-E for a claim chart comparing Hutchins with Claim 10 of the '565 Patent under 35 U.S.C. § 102(e)

Claim 10 recites "*[t]he unit of claim 1*." **Ex. PAT-A**, '565 Patent, 90:57 (emphasis added). As shown in Section VII.A.5.a, Hutchins discloses the unit of claim 1.

Claim 10 next recites and Hutchins discloses that "*a trigger event of the predefined plurality of trigger events is a use of at least one product feature.*" *Id.*, 90:57-59 (emphasis added).

Hutchins discloses numerous trigger events such as feed rate override, spindle speed override, and traverse rate override commands entered by the machine tool operator.

> "Lastly, an event is preferably also logged if the machine tool operator exercises the **feed rate override (FRO), spindle speed override (SSO) or the traverse rate override (TRO)**. The operation of any of these overrides will generate a machine tool operator initiated significant event that will be recorded."

Ex. PA-E, Hutchins, 15:42-45 (emphasis added). It is understood that these commands are a use

of at least one product feature.

i. <u>Claim 14</u>

Claim 14 should be rejected under 35 U.S.C. § 102(e) as unpatentable over Hutchins. Requestor provides a concise statement of the substantial new question of patentability for Claim 14 based on Hutchins under 35 U.S.C. § 102(e).

Please see attached Exhibit CC-E for a claim chart comparing Hutchins with Claim 14 of the '565 Patent under 35 U.S.C. § 102(e)

Claim 14 recites "*[t]he unit of claim 1*." **Ex. PAT-A**, '565 Patent, 91:1 (emphasis added). As shown in Section VII.A.5.a, Hutchins discloses the unit of claim 1.

Claim 14 next recites and Hutchins discloses that "*the processor is further configured to increment the counter corresponding to the trigger event upon detection of a second occurrence of the trigger event*." *Id.*, 91:1-4 (emphasis added).

Hutchins discloses incrementing a program counter incremented after the completion of each "program step" in a series of program steps.

> "Subprogram 100 next tests to determine whether the just transmitted program step is the end of the machine tool part program (decision block 111). **If this is not the end of the part program then the program counter is incremented (processing block 112).** Program control then returns to processing block 103 to **repeat the loop by transmission of the next program step (processing block 104)**."

Ex. PA-E, Hutchins, 16:3-10 (emphasis added).

Hutchins discloses incrementing a batch counter upon each completion of an entire part program.

> "If the last transmitted program step was the **end of the program, then a part has been completed**. This is a program event and would have been detected at decision block 105 and logged at processing block 106."

Id., 16:10-14 (emphasis added).

> "Subprogram 100 then tests to determine whether the end of the batch has not been reached then subprogram 100 **increments the batch counter** (processing block 114) and resets the program counter to the beginning of the program (processing block 115)."

Id., 16:15-20 (emphasis added).

j. <u>Claim 15</u>

Claim 15 should be rejected under 35 U.S.C. § 102(e) as unpatentable over Hutchins. Requestor provides a concise statement of the substantial new question of patentability for Claim 15 based on Hutchins under 35 U.S.C. § 102(e).

Please see attached Exhibit CC-E for a claim chart comparing Hutchins with Claim 15 of the '565 Patent under 35 U.S.C. § 102(e)

Claim 15 recites and Hutchins discloses *"[A] method, comprising: monitoring a product for an occurrence in the product of a trigger event of a predefined plurality of trigger events*." **Ex. PAT-A**, '565 Patent, 91:5-7 (emphasis added).

Hutchins discloses a plurality of trigger events including, but not limited to, input from a touch screen display, input from a keyboard, entering a program event, completion of a part program step, and completion of a part program. The computerized machine tool monitors the local computer user interface and the machine tool for the occurrence of one of these trigger events.

> "Of local computer 10 and the corresponding machine tool(s) 5, and input devices, i.e., **touch screen keyboard, buttons that produce input signals** as software interrupts that permit the machine tool operator to direct the operation of the system."

Ex. PA-E, Hutchins, 6:39-43 (emphasis added).

> "A further subprogram under the run machine tool program checks to determine whether a machine tool part program requires the **logging of an event**. This can occur upon supply of particular machine tool part program steps containing significant events to the machine tool 5 or when the machine tool operator has

> pressed particular control buttons. As will be described below an event is logged by identifying the type of event, date and time of occurrence and storing this data in an event buffer within random access memory 16. The logging of an event signals the host communications subprogram that dispatches a message to host computer 20 via the network 60."

Id., 13:11-23 (emphasis added).

> "When the machine tool operator presses the cycle start button on the machine tool, this loop begins by transmitting the next **program step** to the machine tool (processing block 103). In the initial operation of the machine tool part program this **next program step** is the **first program step**. As previously disclosed, this process takes place via machine tool interface 17, which communicates with machine tool 5."

Id., 14:45-52 (emphasis added).

> "Once this process is complete, then the machine tool operates according to the selected machine tool part program. This process involves a loop that repeats the steps necessary to machine a part until the machine tool **part program is complete**. Completion of the batch of parts involves the execution of the machine tool part program enough times to manufacture the number of parts specified by the batch size."

Id., 14:37-44 (emphasis added).

Claim 15 next recites and Hutchins discloses "*incrementing a counter corresponding to the trigger event upon detection of the occurrence of the trigger event in the product*." **Ex. PAT-A**, '565 Patent, 91:8-10 (emphasis added).

Hutchins discloses incrementing a program counter after a program step.

> "Subprogram 100 next tests to determine whether the just transmitted program step is at the end of the machine tool part program (decision block 111). If this is not the end of the part program then the **program counter is incremented** (processing block 112)."

Ex. PA-E, Hutchins, 16:3-7 (emphasis added).

Hutchins discloses incrementing a counter after the completion of a part program.

> "Subprogram 100 then tests to determine whether the end of the batch has not been reached then subprogram 100 **increments the batch counter** (processing block 114) and resets the program counter to the beginning of the program (processing block 115)."

Id., 16:15-20 (emphasis added).

Hutchins discloses incrementing the program counter (112) and the batch counter (114) as shown in Figure 5:

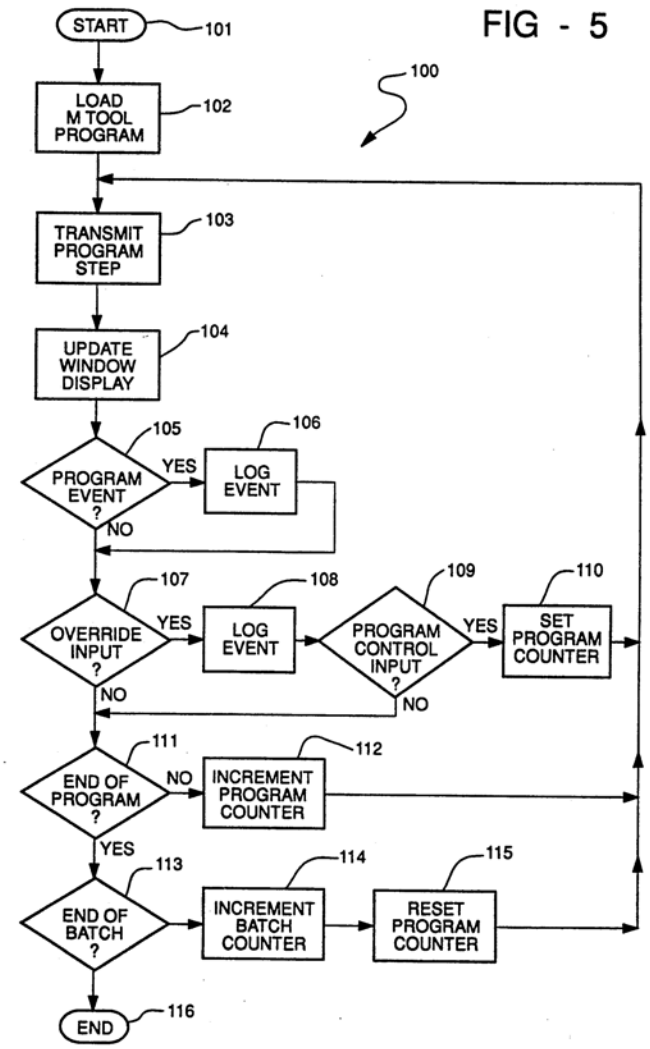

Id., Fig. 5.

Claim 15 next recites and Hutchins discloses "*displaying a user interface, configured to probe for information regarding a use of the product, if the counter exceeds a threshold*." **Ex. PAT-A**, '565 Patent, 91:11-13 (emphasis added).

Hutchins discloses a user interface.

> "Local computer 10 includes central processing unit 11, network interface 12, real time clock 13, computer user interface 14, memory including read only memory 16 and random access read/write memory 16, and at least one machine tool interface 17."

Ex. PA-E, Hutchins, 6:6-10 (emphasis added).

Hutchins discloses displaying a user interface, configured to probe for information regarding a use of the product.

> "The **computer user interface 14** permits **two way interaction between the machine tool operator and computer** 10. **Computer user interface 14** may include a video display, flat panel display, touch screen, keyboard, or buttons as appropriate and serves as the user interface of local computer 10. The **computer user interface 14** includes a display that produces a visual image corresponding to display signals from central processing unit 11 for the user."

Id., 6:30-38 (emphasis added).

> "Of local computer 10 and the corresponding machine tool(s) 5, and input devices, i.e., touch screen keyboard, buttons that produce **input signals** as software interrupts that permit the machine tool operator to **direct the operation of the system**."

Id., 6:39-43 (emphasis added).

Hutchins discloses a user interface to permit a machine tool operator to record events that include information about the use of the local computer and machine tool.

> "The other type of events reported include operator initiated events at the machine tool. These machine tool operator initiated events include, but are not limited to: **down-loading a machine tool part program to the machine tool; setting the batch size; beginning or ending the operation cycle of the machine tool part program; skipping or deleting operations such as may occur when reworking a work piece; editing the machine tool part program data using the local editing capabilities of the controller; and setting the feed rate override (FRO), spindle speed override (SSO), or the traverse rate override (TRO)**."

Id., 3:16-27 (emphasis added).

Hutchins discloses updating the user interface – window display – as the part program is running.

> "Subprogram 100 signals (sends a message to) the display program to **update a window display** of the operating program (processing block 104)."

Id., 14:53-55 (emphasis added).

Hutchins discloses resetting the user interface when the batch counter exceeds a threshold (signifying the end of a batch). Hutchins next discloses providing a user interface upon the downloading of a machine tool part program.

> "If the program has **completed the end of the batch** then subprogram 100 signals host computer 20 that a batch has been completed. Additional parts may still be made, but they will be made under an exception condition. The final end to the production of this batch of parts occurs after the job cleanup **when the machine tool operator downloads a new machine tool part program for the next batch of parts**."

Id., 16:25-32 (emphasis added).

> "The execution of the machine tool interface subprogram 200 begins via start block 201. The machine tool is in an idle status until the machine tool operator downloads a machine tool part program. This process involves interaction with local computer 10 via computer user interface 14 and communication with host computer 20. The **machine tool operator must select the desired machine tool part program** from those available at host computer 20**.** This is preferably done via a **menu selection process**. Host computer 20 is aware of the identity of the particular local computer 10 and preferably offers the machine tool operator only those machine tool part programs that are proper for use by the corresponding machine tool(s) 5. Upon selection of a particular machine tool part program, host computer 20 transmits this machine tool part program to local computer 10 via computer network 60. Local computer 10 then stores this machine tool part program within random access memory 16. Running of the particular machine tool part program begins at its first program step."

Id., 14:5-25 (emphasis added).

> "The process of running the machine tool part program preferably involves a specification of the batch size. In addition, a batch number for management identification of a particular batch may also be provided. The number of parts in the batch is employed later in control of the machine tool operation. The setting of the batch size and batch I.D. are preferably events signaled to host computer 20. Other data for identification of the job for management reports may also be required. Entry of all this data preferably occurs within processing block 102."

Id., 14:26-36 (emphasis added).

> "Once this process is complete, then the machine tool operates according to the selected machine tool part program. This process involves a loop that repeats the steps necessary to machine a part until the machine tool part program is complete.

> Completion of the batch of parts involves the execution of the machine tool part program enough times to manufacture the number of parts specified by the batch size."

Id., 14:37-44 (emphasis added).

The user interface is displayed upon completion of a program step after a program counter increments and after the program counter is exceeded.

> "Update Window Display 104"

Id., Fig. 5.

> "Subprogram 100 signals (sends a message to) the display program to **update a window display** of the operating program (processing block 104)."

Id., 14:53-55 (emphasis added).

> "Subprogram 100 next tests to determine whether the just transmitted program step is a programmed significant event (decision block 105)."

Id., 15:1-3 (emphasis added).

> "The present invention also provides the capability for marking other special events in the machine tool part program. An engineer or master machine tool operator charged with debugging or improving a machine tool part program thus may flag particular portions of the program in order to observe its operation during actual manufacture of parts."

Id., 15:12-18 (emphasis added).

> "Whether a program event has been detected, subprogram 100 is signalled (sic) when a machine tool operator initiated event is received (decision block 107)."

Id., 15:29-31 (emphasis added).

Claim 15 next recites and Hutchins discloses "*storing an input received from the user interface on a device*." **Ex. PAT-A**, '565 Patent, 91:14-15 (emphasis added).

Hutchins discloses that memory stores the events recorded by the machine tool operator.

> "As will be described below, an event is logged by identifying the type of event, date and time of occurrence and **storing this data in an event buffer within random access memory 16**."

Id., 13:17-20 (emphasis added).

> "If such a program event is detected, then subprogram 100 logs this event (processing block 106). This process involves writing the identity and the date and time of occurrence of this event to the **reserved event buffer within random access memory 16**."

Id., 15:19-23 (emphasis added).

> "Upon detection of any such operator initiated event, the i**dentity and date and time are logged** (processing block 108) in the manner previously described."

Id., 15:47-50 (emphasis added).

Claim 15 next recites and Hutchins discloses "*transmitting the input to a server*." **Ex. PAT-A**, '565 Patent, 91:16 (emphasis added).

Hutchins discloses transmission of the recorded events stored in random access memory to the host computer ("server").

> "As explained above, a host communication program running on the local computer 10 is signalled (sic) about the logging of such an event and **transmits this event to host computer 20**."

Ex. PA-E, Hutchins, 15:24-28 (emphasis added).

> "Note that the host communications program **transmits any such logged event to host computer 20**."

Id., 15:50-52 (emphasis added).

k. <u>Claim 17</u>

Claim 17 should be rejected under 35 U.S.C. § 102(e) as unpatentable over Hutchins. Requestor provides a concise statement of the substantial new question of patentability for Claim 17 based on Hutchins under 35 U.S.C. § 102(e).

Please see attached Exhibit CC-E for a claim chart comparing Hutchins with Claim 17 of the '565 Patent under 35 U.S.C. § 102(e)

Claim 17 recites "*[t]he method of claim 15*." **Ex. PAT-A**, '565 Patent, 91:20 (emphasis added). As shown in Section VII.A.5.j, Hutchins discloses the method of claim 15.

Claim 17 next recites and Hutchins discloses "*monitoring the product for an occurrence in the product of a second trigger event of the predefined plurality of trigger events*" *Id.*, 91:21-23 (emphasis added).

Hutchins discloses monitoring the local computer and machine tool for an occurrence in the product of the completion of a program step ("first trigger event") and the completion of a part program ("second trigger event").

> "Subprogram 100 next tests to determine **whether the just transmitted program step** is at the **end of the machine tool part program** (decision block 111). If this is not the end of the part program then the program counter is incremented (processing block 112)."

Ex. PA-E, Hutchins, 16:3-7 (emphasis added).

Figure 5 shows the monitoring procedure of Hutchins:

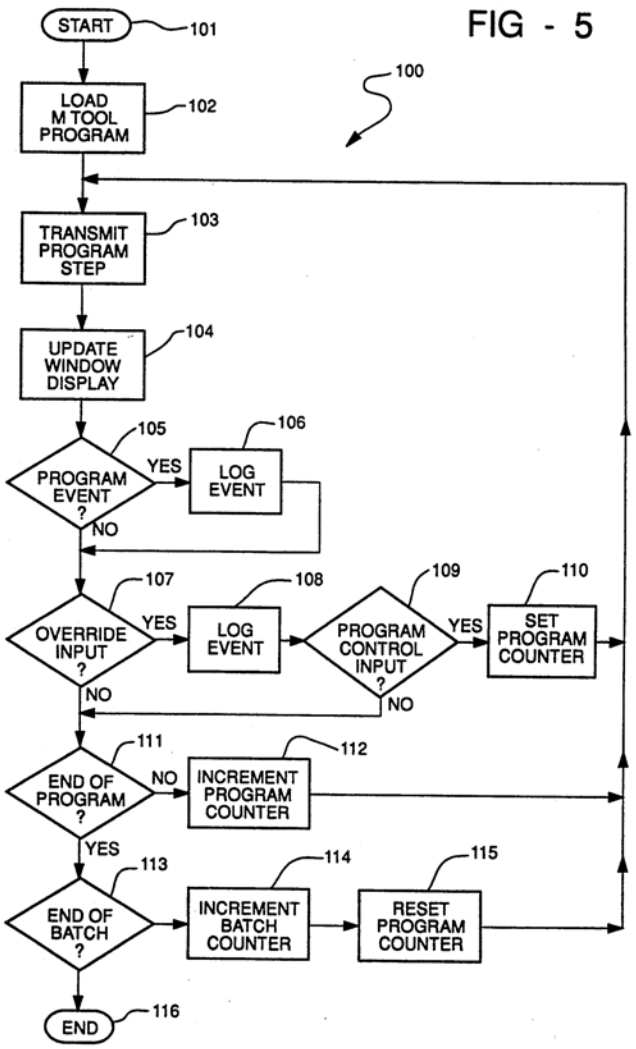

Id., Fig. 5.

Claim 17 next recites and Hutchins discloses "*incrementing a value of a second counter corresponding to the second trigger event upon detection of the second trigger event in the product*" **Ex. PAT-A**, '565 Patent, 91:24-26 (emphasis added).

Hutchins discloses incrementing a batch counter upon completion of a part program ("second trigger event").

> "Subprogram 100 then tests to determine whether the end of the batch has been reached. If the batch has not been reached then subprogram 100 i**ncrements the batch counter** (processing block 114) and resets the program counter to the beginning of the program (processing block 115)."

Ex. PA-E, Hutchins, 16:15-20 (emphasis added).

l. <u>Claim 18</u>

Claim 18 should be rejected under 35 U.S.C. § 102(e) as unpatentable over Hutchins. Requestor provides a concise statement of the substantial new question of patentability for Claim 18 based on Hutchins under 35 U.S.C. § 102(e).

Please see attached Exhibit CC-E for a claim chart comparing Hutchins with Claim 18 of the '565 Patent under 35 U.S.C. § 102(e)

Claim 18 recites "*[t]he method of claim 17*." **Ex. PAT-A**, '565 Patent, 91:27 (emphasis added). As shown in Section VII.A.5.k, Hutchins discloses the method of claim 17.

Claim 18 next recites and Hutchins discloses "*storing the second counter on the device*." *Id.*, 91:28. (emphasis added).

Hutchins discloses a batch counter ("second counter") that is implemented in the local computer.

> "Subprogram 100 then tests to determine whether the end of the batch has been reached. If the batch has not been reached then subprogram 100 i**ncrements the batch counter** (processing block 114) and resets the program counter to the beginning of the program (processing block 115)."

Ex. PA-E, Hutchins, 16:15-20 (emphasis added). It is understood from this disclosure that the second counter is stored in memory.

Claim 18 next recites and Hutchins discloses "*transmitting a value of the second counter to the server*." **Ex. PAT-A**, '565 Patent, 91:29. (emphasis added).

Hutchins discloses signaling to the host computer that a batch has been completed ("value of the second counter").

> "The setting of the **batch size and batch I.D.** are preferably **events signaled to host computer 20**."

Ex. PA-E, Hutchins, 14:31-33 (emphasis added).

> "If the program has completed the end of the batch then subprogram 100 **signals host computer 20 that a batch has been completed**."

Id., 16:25-27 (emphasis added). It is understood from this disclosure that the value of the second counter is transmitted to the host computer.

m. <u>Claim 19</u>

Claim 19 should be rejected under 35 U.S.C. § 102(e) as unpatentable over Hutchins. Requestor provides a concise statement of the substantial new question of patentability for Claim 19 based on Hutchins under 35 U.S.C. § 102(e).

Please see attached Exhibit CC-E for a claim chart comparing Hutchins with Claim 19 of the '565 Patent under 35 U.S.C. § 102(e)

Claim 19 recites "*[t]he method of claim 15*." **Ex. PAT-A**, '565 Patent, 91:30 (emphasis added). As shown in Section VII.A.5.j, Hutchins discloses the method of claim 15.

Claim 19 next recites and Hutchins discloses that "*one of the predefined plurality of trigger events is a problem associated with the product*." *Id.*, 91:30-32 (emphasis added).

Hutchins discloses the capability to mark a special event in the machine tool part program such as flagging portions of the program for debugging ("problem associated with the product").

> "The present invention also provides the capability for **marking other special events** in the machine tool part program. An engineer or master machine tool operator charged with **debugging** or improving a machine tool part program thus **may flag particular portions of the program** in order to observe its operation during actual manufacture of parts."

Ex. PA-E, Hutchins, 15:12-18 (emphasis added).

n. <u>Claim 20</u>

Claim 20 should be rejected under 35 U.S.C. § 102(e) as unpatentable over Hutchins. Requestor provides a concise statement of the substantial new question of patentability for Claim 20 based on Hutchins under 35 U.S.C. § 102(e).

Please see attached Exhibit CC-E for a claim chart comparing Hutchins with Claim 20 of the '565 Patent under 35 U.S.C. § 102(e)

Claim 20 recites "*[t]he method of claim 15*." **Ex. PAT-A**, '565 Patent, 91:33 (emphasis added). As shown in Section VII.A.1.k, Hutchins discloses the method of claim 15.

Claim 20 next recites and Hutchins discloses "*wherein one of the predefined plurality of trigger events is an exiting of a feature of the product without a use of the feature*." *Id.*, 91:33-35. (emphasis added).

Hutchins discloses exiting a tool status display ("exiting a feature of the product") without changing the tool status display ("without a use of the feature").

> "This machine tool status display preferably includes information regarding the current production quantity completed and the completed proportion of the manufacture of the present part. Program 200 tests to determine **whether the computer user desires to exit tool status display** (decision block 205). If the computer user **does not wish to change the tool status display then program** 200 delays for a predetermined polling interval (processing block 206) and refreshes the display with the then current information."

Ex. PA-E, Hutchins, 17:58-67 (emphasis added).

o. <u>Claim 21</u>

Claim 21 should be rejected under 35 U.S.C. § 102(e) as unpatentable over Hutchins. Requestor provides a concise statement of the substantial new question of patentability for Claim 21 based on Hutchins under 35 U.S.C. § 102(e).

Please see attached Exhibit CC-E for a claim chart comparing Hutchins with Claim 21 of the '565 Patent under 35 U.S.C. § 102(e)

Claim 21 recites "*[t]he method of claim 19*." **Ex. PAT-A**, '565 Patent, 91:36 (emphasis added). As shown in Section VII.A.5.m, Hutchins discloses the method of claim 19.

Claim 21 next recites and Hutchins discloses that "*the problem is an equipment problem*." *Id.*, 91:36-37 (emphasis added).

Hutchins discloses the capability to mark a special event in the machine tool part program such as flagging portions of the program for debugging ("problem associated with the product").

> "The present invention also provides the capability for marking other special events in the machine tool part program. An engineer or master machine tool operator charged with debugging or improving a machine tool part program thus may flag particular portions of the program in order to observe its operation during actual manufacture of parts."

Ex. PA-E, Hutchins, 15:12-18 (emphasis added). It is understood the need for debugging could be caused by an equipment problem.

p. <u>Claim 22</u>

Claim 22 should be rejected under 35 U.S.C. § 102(e) as unpatentable over Hutchins. Requestor provides a concise statement of the substantial new question of patentability for Claim 22 based on Hutchins under 35 U.S.C. § 102(e).

Please see attached Exhibit CC-E for a claim chart comparing Hutchins with Claim 22 of the '565 Patent under 35 U.S.C. § 102(e)

Claim 22 recites "*[t]he method of claim 15*." **Ex. PAT-A**, '565 Patent, 91:39 (emphasis added). As shown in Section VII.A.5.j, Hutchins discloses the method of claim 15.

Claim 22 next recites and Hutchins discloses that "*one of the predefined plurality of trigger events is a use of at least one product feature*." *Id.*, 91:39-41 (emphasis added).

Hutchins discloses numerous trigger events such as feed rate override, spindle speed override, and traverse rate override commands entered by the machine tool operator.

> "Lastly, an event is preferably also logged if the machine tool operator exercises the **feed rate override (FRO), spindle speed override (SSO) or the traverse rate override (TRO)**. The operation of any of these overrides will generate a machine tool operator initiated significant event that will be recorded."

Ex. PA-E, Hutchins, 15:42-45 (emphasis added). It is understood that these commands are a use of at least one product feature.

q. <u>Claim 26</u>

Claim 26 should be rejected under 35 U.S.C. § 102(e) as unpatentable over Hutchins. Requestor provides a concise statement of the substantial new question of patentability for Claim 26 based on Hutchins under 35 U.S.C. § 102(e).

Please see attached Exhibit CC-E for a claim chart comparing Hutchins with Claim 26 of the '565 Patent under 35 U.S.C. § 102(e)

Claim 26 recites "*[t]he method of claim 15*." **Ex. PAT-A**, '565 Patent, 91:48 (emphasis added). As shown in Section VII.A.5.j, Hutchins discloses the method of claim 15.

Claim 26 next recites and Hutchins discloses "*further comprising: incrementing the counter corresponding to the trigger event upon detection of a second occurrence of the trigger event in the product*." *Id.*, 91:48-51 (emphasis added).

Hutchins incrementing a program counter upon completion of each part program step

> "Subprogram 100 next tests to determine whether the just transmitted program step is the end of the machine tool part program (decision block 111). If this is not the end of the part program then the program counter is incremented (processing block 112). Program control then returns to processing block 103 to **repeat the loop by transmission of the next program step (processing block 104)**. If the

> last transmitted program step was the end of the program, then a part has been completed. This is a program event and would have been detected at decision block 105 and logged at processing block 106."

Ex. PA-E, Hutchins, 16:3-14 (emphasis added).

r. <u>Claim 27</u>

Claim 27 should be rejected under 35 U.S.C. § 102(e) as unpatentable over Hutchins. Requestor provides a concise statement of the substantial new question of patentability for Claim 27 based on Hutchins under 35 U.S.C. § 102(e).

Please see attached Exhibit CC-E for a claim chart comparing Hutchins with Claim 27 of the '565 Patent under 35 U.S.C. § 102(e)

Claim 27 recites and Hutchins discloses "*[a] tangible computer readable medium having stored thereon, computer executable instructions that, if executed by a computing device, cause the computing device to perform a method*." **Ex. PAT-A**, '565 Patent, 92:1-4 (emphasis added).

Hutchins discloses a computer including a CPU and memory containing instructions to perform the method of claim 27. *See, e.g.*, Figs. 3, 5.

> "Each local computer 10 includes a MAIN program which orchestrates the coordination of subsidiary programs serving as the user interface between local computer 10 and the computer user interface 14, the machine tool interface 17 and the corresponding machine tool 5."

Ex. PA-E, Hutchins, 12:44-49 (emphasis added).

> One of the subprograms available to the user of local computer 10 runs a machine tool 5. This run machine tool subprogram reads each block of the machine tool part program data and energizes the machine tool 5 and its servo systems through the machine tool interface 17 according to the instructions contained in the block. This subprogram will be described in further detail in conjunction with FIG. 5.

Id., 13:3-10 (emphasis added).

Claim 27 next recites and Hutchins discloses "*monitoring a product for an occurrence in the product of a trigger event of a predefined plurality of trigger events*." **Ex. PAT-A**, '565 Patent, 92:5-6 (emphasis added).

Hutchins discloses a plurality of trigger events including, but not limited to, input from a touch screen display, input from a keyboard, entering a program event, completion of a part program step, and completion of a part program. The computerized machine tool monitors the local computer user interface and the machine tool for the occurrence of one of these trigger events.

> "Of local computer 10 and the corresponding machine tool(s) 5, and input devices, i.e., **touch screen keyboard, buttons that produce input signals** as software interrupts that permit the machine tool operator to direct the operation of the system."

Ex. PA-E, Hutchins, 6:39-43 (emphasis added).

> "A further subprogram under the run machine tool program checks to determine whether a machine tool part program requires the **logging of an event**. This can occur upon supply of particular machine tool part program steps containing significant events to the machine tool 5 or when the machine tool operator has pressed particular control buttons. As will be described below an event is logged by identifying the type of event, date and time of occurrence and storing this data in an event buffer within random access memory 16. The logging of an event signals the host communications subprogram that dispatches a message to host computer 20 via the network 60."

Id., 13:11-23 (emphasis added).

> "When the machine tool operator presses the cycle start button on the machine tool, this loop begins by transmitting the next **program step** to the machine tool (processing block 103). In the initial operation of the machine tool part program this **next program step** is the **first program step**. As previously disclosed, this process takes place via machine tool interface 17, which communicates with machine tool 5."

Id., 14:46-53 (emphasis added).

> "Once this process is complete, then the machine tool operates according to the selected machine tool part program. This process involves a loop that repeats the steps necessary to machine a part until the machine tool **part program is**

> **complete**. Completion of the batch of parts involves the execution of the machine tool part program enough times to manufacture the number of parts specified by the batch size."

Id., 14:37-44 (emphasis added).

Claim 27 next recites and Hutchins discloses "*incrementing a counter corresponding to the trigger event upon detection of the occurrence of the trigger event in the product*." **Ex. PAT-A**, '565 Patent, 92:7-9 (emphasis added).

Hutchins discloses incrementing a program counter after a program step.

> "Subprogram 100 next tests to determine whether the just transmitted program step is at the end of the machine tool part program (decision block 111). If this is not the end of the part program then the **program counter is incremented** (processing block 112)."

Ex. PA-E, Hutchins, 16:3-7 (emphasis added).

Hutchins discloses incrementing a counter after the completion of a part program.

> Subprogram 100 then tests to determine whether the end of the batch has not been reached then subprogram 100 **increments the batch counter** (processing block 114) and resets the program counter to the beginning of the program (processing block 115).

Id., 16:15-20 (emphasis added).

Hutchins discloses incrementing the program counter (112) and the batch counter (114) as shown in Figure 5:

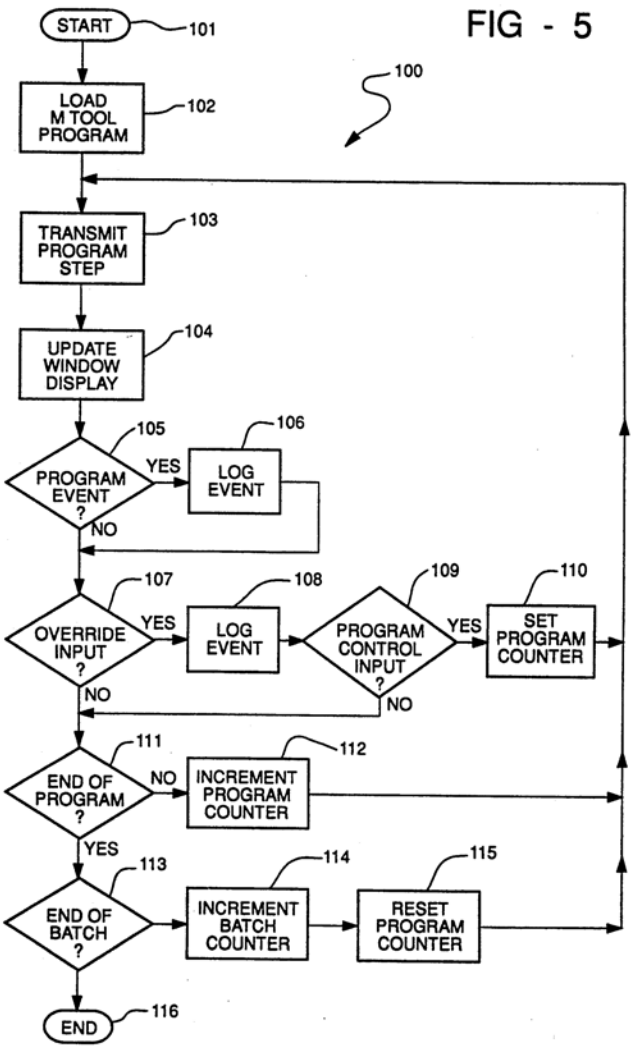

Id., Fig. 5.

Claim 27 next recites and Hutchins discloses "*displaying a user interface, configured to probe for information regarding a use of the product, if the counter exceeds a threshold*." **Ex. PAT-A**, '565 Patent, 92:10-12 (emphasis added).

Hutchins discloses a user interface.

> "Local computer 10 includes central processing unit 11, network interface 12, real time clock 13, computer user interface 14, memory including read only memory 16 and random access read/write memory 16, and at least one machine tool interface 17."

Ex. PA-E, Hutchins, 6:6-10 (emphasis added).

Hutchins discloses displaying a user interface, configured to probe for information regarding a use of the product.

> "The **computer user interface 14** permits **two way interaction between the machine tool operator and computer** 10. **Computer user interface 14** may include a video display, flat panel display, touch screen, keyboard, or buttons as appropriate and serves as the user interface of local computer 10. The **computer user interface 14** includes a display that produces a visual image corresponding to display signals from central processing unit 11 for the user."

Id., 6:30-38 (emphasis added).

> "Of local computer 10 and the corresponding machine tool(s) 5, and input devices, i.e., touch screen keyboard, buttons that produce **input signals** as software interrupts that permit the machine tool operator to **direct the operation of the system**."

Id., 6:39-43 (emphasis added).

Hutchins discloses a user interface to permit a machine tool operator to record events that include information about the use of the local computer and machine tool.

> "The other type of events reported include operator initiated events at the machine tool. These machine tool operator initiated events include, but are not limited to: **down-loading a machine tool part program to the machine tool; setting the batch size; beginning or ending the operation cycle of the machine tool part program; skipping or deleting operations such as may occur when reworking a work piece; editing the machine tool part program data using the local editing capabilities of the controller; and setting the feed rate override (FRO), spindle speed override (SSO), or the traverse rate override (TRO)**."

Id., 3:16-27 (emphasis added).

Hutchins discloses updating the user interface – window display – as the part program is running.

> "Subprogram 100 signals (sends a message to) the display program to **update a window display** of the operating program (processing block 104)."

Id., 14:53-55 (emphasis added).

Hutchins discloses resetting the user interface when the batch counter exceeds a threshold (signifying the end of a batch). Hutchins next discloses providing a user interface upon the downloading of a machine tool part program.

> "If the program has **completed the end of the batch** then subprogram 100 signals host computer 20 that a batch has been completed. Additional parts may still be made, but they will be made under an exception condition. The final end to the production of this batch of parts occurs after the job cleanup **when the machine tool operator downloads a new machine tool part program for the next batch of parts**."

Id., 16:25-32 (emphasis added).

> "The execution of the machine tool interface subprogram 200 begins via start block 201. The machine tool is in an idle status until the machine tool operator downloads a machine tool part program. This process involves interaction with local computer 10 via computer user interface 14 and communication with host computer 20. The **machine tool operator must select the desired machine tool part program** from those available at host computer 20**.** This is preferably done via a **menu selection process**. Host computer 20 is aware of the identity of the particular local computer 10 and preferably offers the machine tool operator only those machine tool part programs that are proper for use by the corresponding machine tool(s) 5. Upon selection of a particular machine tool part program, host computer 20 transmits this machine tool part program to local computer 10 via computer network 60. Local computer 10 then stores this machine tool part program within random access memory 16. Running of the particular machine tool part program begins at its first program step."

Id., 14:5-25 (emphasis added).

> "The process of running the machine tool part program preferably involves a specification of the batch size. In addition, a batch number for management identification of a particular batch may also be provided. The number of parts in the batch is employed later in control of the machine tool operation. The setting of the batch size and batch I.D. are preferably events signaled to host computer 20. Other data for identification of the job for management reports may also be required. Entry of all this data preferably occurs within processing block 102."

Id., 14:26-36 (emphasis added).

> "Once this process is complete, then the machine tool operates according to the selected machine tool part program. This process involves a loop that repeats the steps necessary to machine a part until the machine tool part program is complete. Completion of the batch of parts involves the execution of the machine tool part program enough times to manufacture the number of parts specified by the batch

size."

Id., 14:37-44 (emphasis added).

The user interface is displayed upon completion of a program step after a program counter increments and after the program counter is exceeded.

"Update Window Display 104"

Id., Fig. 5.

"Subprogram 100 signals (sends a message to) the display program to **update a window display** of the operating program (processing block 104)."

Id., 14:53-55 (emphasis added).

"Subprogram 100 next tests to determine whether the just transmitted program step is a programmed significant event (decision block 105)."

Id., 15:1-3 (emphasis added).

"The present invention also provides the capability for marking other special events in the machine tool part program. An engineer or master machine tool operator charged with debugging or improving a machine tool part program thus may flag particular portions of the program in order to observe its operation during actual manufacture of parts."

Id., 15:12-18 (emphasis added).

"Whether a program event has been detected, subprogram 100 is signalled (sic) when a machine tool operator initiated event is received (decision block 107)."

Id., 15:29-31 (emphasis added).

Claim 27 next recites and Hutchins discloses "*storing an input received from the user interface on a device*." **Ex. PAT-A**, '565 Patent, 92:13-14 (emphasis added).

Hutchins discloses that memory stores the events recorded by the machine tool operator.

"As will be described below, an event is logged by identifying the type of event, date and time of occurrence and **storing this data in an event buffer within random access memory 16**."

Ex. PA-E, Hutchins, 13:17-20 (emphasis added).

"If such a program event is detected, then subprogram 100 logs this event

> (processing block 106). This process involves writing the identity and the date and time of occurrence of this event to the **reserved event buffer within random access memory 16**."

Id., 15:19-23 (emphasis added).

> "Upon detection of any such operator initiated event, the i**dentity and date and time are logged** (processing block 108) in the manner previously described."

Id., 15:47-50 (emphasis added).

Claim 27 next recites and Hutchins discloses "*transmitting the input to a server*." **Ex. PAT-A**, '565 Patent, 92:15 (emphasis added).

Hutchins discloses transmission of the recorded events stored in random access memory to the host computer ("server").

> "As explained above, a host communication program running on the local computer 10 is signalled (sic) about the logging of such an event and **transmits this event to host computer 20**."

Ex. PA-E, Hutchins, 15:24-28 (emphasis added).

> "Note that the host communications program **transmits any such logged event to host computer 20**."

Id., 15:50-52 (emphasis added).

s. <u>Claim 28</u>

Claim 28 should be rejected under 35 U.S.C. § 102(e) as unpatentable over Hutchins. Requestor provides a concise statement of the substantial new question of patentability for Claim 28 based on Hutchins under 35 U.S.C. § 102(e).

Please see attached Exhibit CC-E for a claim chart comparing Hutchins with Claim 28 of the '565 Patent under 35 U.S.C. § 102(e)

Claim 28 recites "*[t]he tangible computer readable medium of claim 27*." **Ex. PAT-A**, '565 Patent, 91:16 (emphasis added). As shown in Section VII.A.5.r, Hutchins discloses the tangible computer readable medium of claim 27.

Claim 28 next recites and Hutchins discloses "*wherein the monitoring further includes: monitoring the product for an occurrence in the product of a second trigger event of the predefined plurality of trigger events.*" *Id.*, 91:17-20 (emphasis added).

Hutchins discloses monitoring the local computer and machine tool for an occurrence in the product of the completion of a program step ("first trigger event") and the completion of a part program ("second trigger event").

> "Subprogram 100 next tests to determine **whether the just transmitted program step** is at the **end of the machine tool part program** (decision block 111). If this is not the end of the part program then the program counter is incremented (processing block 112)."

Ex. PA-E, Hutchins, 16:3-7 (emphasis added).

Claim 28 next recites and Hutchins discloses "[*wherein the monitoring further includes:] incrementing a value of a second counter corresponding to the second trigger event upon detection of the occurrence of the second trigger event in the product.*" **Ex. PAT-A**, '565 Patent, 91:21-23 (emphasis added).

Hutchins discloses incrementing a batch counter upon completion of a part program ("second trigger event").

> "Subprogram 100 then tests to determine whether the end of the batch has been reached. If the batch has not been reached then subprogram 100 i**ncrements the batch counter** (processing block 114) and resets the program counter to the beginning of the program (processing block 115)."

Ex. PA-E, Hutchins, 16:15-20 (emphasis added).

t. <u>Claim 29</u>

Claim 29 should be rejected under 35 U.S.C. § 102(e) as unpatentable over Hutchins. Requestor provides a concise statement of the substantial new question of patentability for Claim 29 based on Hutchins under 35 U.S.C. § 102(e).

Please see attached Exhibit CC-E for a claim chart comparing Hutchins with Claim 29 of the '565 Patent under 35 U.S.C. § 102(e)

Claim 29 recites "*[t]he tangible computer readable medium of claim 27 [sic]*." **Ex. PAT-A**, '565 Patent, 91:24 (emphasis added). As shown in Section VII.A.5.s, Hutchins discloses the tangible computer readable medium of claim 28.

Claim 29 next recites and Hutchins discloses "*wherein the method further includes: storing the second counter on the device.*" *Id.*, 91:25-26 (emphasis added).

Hutchins discloses a batch counter ("second counter") that is implemented in the local computer.

> "Subprogram 100 then tests to determine whether the end of the batch has been reached. If the batch has not been reached then subprogram 100 i**ncrements the batch counter** (processing block 114) and resets the program counter to the beginning of the program (processing block 115)".

Ex. PA-E, Hutchins, 16:15-20 (emphasis added). It is understood from this disclosure that the second counter is stored in memory.

Claim 29 next recites and Hutchins discloses "*[wherein the method further includes:] transmitting the value of the second counter to the server*" **Ex. PAT-A**, '565 Patent, 91:27 (emphasis added).

Hutchins discloses signaling to the host computer that a batch has been completed ("value of the second counter").

> "The setting of the **batch size and batch I.D.** are preferably **events signaled to host computer 20**."

Ex. PA-E, Hutchins, 14:31-33 (emphasis added).

> "If the program has completed the end of the batch then subprogram 100 **signals host computer 20 that a batch has been completed**."

Id., 16:25-27 (emphasis added). It is understood from this disclosure that the value of the

second counter is transmitted to the host computer.

u. <u>Claim 30</u>

Claim 30 should be rejected under 35 U.S.C. § 102(e) as unpatentable over Hutchins. Requestor provides a concise statement of the substantial new question of patentability for Claim 30 based on Hutchins under 35 U.S.C. § 102(e).

Please see attached Exhibit CC-E for a claim chart comparing Hutchins with Claim 30 of the '565 Patent under 35 U.S.C. § 102(e)

Claim 30 recites and Hutchins discloses *"[A] physical unit, comprising: means for monitoring a product for an occurrence in the product of a trigger event of a predefined plurality of trigger events*." **Ex. PAT-A**, '565 Patent, 92:28-31 (emphasis added).

Hutchins discloses a plurality of trigger events including, but not limited to, input from a touch screen display, input from a keyboard, entering a program event, completion of a part program step, and completion of a part program. The computerized machine tool monitors the local computer user interface and the machine tool for the occurrence of one of these trigger events.

> "Of local computer 10 and the corresponding machine tool(s) 5, and input devices, i.e., **touch screen keyboard, buttons that produce input signals** as software interrupts that permit the machine tool operator to direct the operation of the system."

Ex. PA-E, Hutchins, 6:39-43 (emphasis added).

> "A further subprogram under the run machine tool program checks to determine whether a machine tool part program requires the **logging of an event**. This can occur upon supply of particular machine tool part program steps containing significant events to the machine tool 5 or when the machine tool operator has pressed particular control buttons. As will be described below an event is logged by identifying the type of event, date and time of occurrence and storing this data in an event buffer within random access memory 16. The logging of an event signals the host communications subprogram that dispatches a message to host computer 20 via the network 60."

Id., 13:11-23 (emphasis added).

> "When the machine tool operator presses the cycle start button on the machine tool, this loop begins by transmitting the next **program step** to the machine tool (processing block 103). In the initial operation of the machine tool part program this **next program step** is the **first program step**. As previously disclosed, this process takes place via machine tool interface 17, which communicates with machine tool 5."

Id., 14:45-52 (emphasis added).

> "Once this process is complete, then the machine tool operates according to the selected machine tool part program. This process involves a loop that repeats the steps necessary to machine a part until the machine tool **part program is complete**. Completion of the batch of parts involves the execution of the machine tool part program enough times to manufacture the number of parts specified by the batch size."

Id., 14:38-45 (emphasis added).

Claim 30 next recites and Hutchins discloses "means for incrementing a counter corresponding to th*e trigger event upon detection of the occurrence of the trigger event*." **Ex. PAT-A**, '565 Patent, 92:32-34 (emphasis added).

Hutchins discloses incrementing a program counter after a program step.

> "Subprogram 100 next tests to determine whether the just transmitted program step is at the end of the machine tool part program (decision block 111). If this is not the end of the part program then the **program counter is incremented** (processing block 112)."

Ex. PA-E, Hutchins, 16:3-7 (emphasis added).

Hutchins discloses incrementing a counter after the completion of a part program.

> "Subprogram 100 then tests to determine whether the end of the batch has not been reached then subprogram 100 **increments the batch counter** (processing block 114) and resets the program counter to the beginning of the program (processing block 115)."

Id., 16:15-20 (emphasis added).

Hutchins discloses incrementing the program counter (112) and the batch counter (114) as shown in Figure 5:

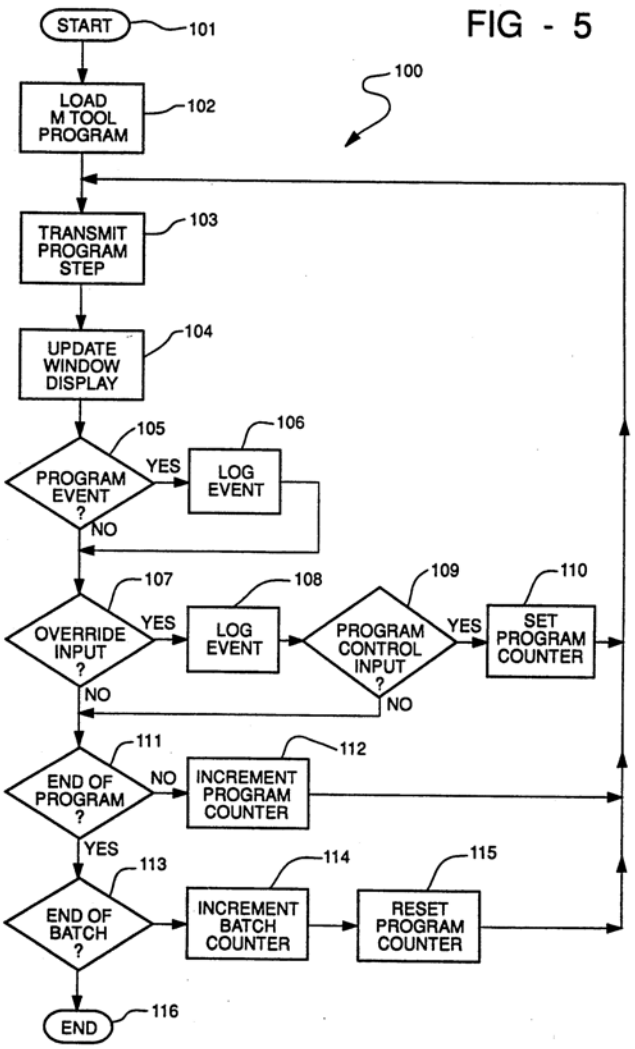

Id., Fig. 5.

Claim 30 next recites and Hutchins discloses "*means for probing for information regarding a use of the product if the counter exceeds a threshold*." **Ex. PAT-A**, '565 Patent, 92:35-36 (emphasis added).

Hutchins discloses a user interface.

> "Local computer 10 includes central processing unit 11, network interface 12, real time clock 13, computer user interface 14, memory including read only memory 16 and random access read/write memory 16, and at least one machine tool interface 17."

Ex. PA-E, Hutchins, 6:6-10 (emphasis added).

Hutchins discloses displaying a user interface, configured to probe for information regarding a use of the product.

> "The **computer user interface 14** permits **two way interaction between the machine tool operator and computer** 10. **Computer user interface 14** may include a video display, flat panel display, touch screen, keyboard, or buttons as appropriate and serves as the user interface of local computer 10. The **computer user interface 14** includes a display that produces a visual image corresponding to display signals from central processing unit 11 for the user."

Id., 6:30-38 (emphasis added).

> "Of local computer 10 and the corresponding machine tool(s) 5, and input devices, i.e., touch screen keyboard, buttons that produce **input signals** as software interrupts that permit the machine tool operator to **direct the operation of the system**."

Id., 6:39-43 (emphasis added).

Hutchins discloses a user interface to permit a machine tool operator to record events that include information about the use of the local computer and machine tool.

> "The other type of events reported include operator initiated events at the machine tool. These machine tool operator initiated events include, but are not limited to: **down-loading a machine tool part program to the machine tool; setting the batch size; beginning or ending the operation cycle of the machine tool part program; skipping or deleting operations such as may occur when reworking a work piece; editing the machine tool part program data using the local editing capabilities of the controller; and setting the feed rate override (FRO), spindle speed override (SSO), or the traverse rate override (TRO)**."

Id., 3:16-27 (emphasis added).

Hutchins discloses updating the user interface – window display – as the part program is running.

> "Subprogram 100 signals (sends a message to) the display program to **update a window display** of the operating program (processing block 104)."

Id., 14:53-55 (emphasis added).

Hutchins discloses resetting the user interface when the batch counter exceeds a threshold (signifying the end of a batch). Hutchins next discloses providing a user interface upon the downloading of a machine tool part program.

> "If the program has **completed the end of the batch** then subprogram 100 signals host computer 20 that a batch has been completed. Additional parts may still be made, but they will be made under an exception condition. The final end to the production of this batch of parts occurs after the job cleanup **when the machine tool operator downloads a new machine tool part program for the next batch of parts**."

Id., 16:25-32 (emphasis added).

> "The execution of the machine tool interface subprogram 200 begins via start block 201. The machine tool is in an idle status until the machine tool operator downloads a machine tool part program. This process involves interaction with local computer 10 via computer user interface 14 and communication with host computer 20. The **machine tool operator must select the desired machine tool part program** from those available at host computer 20**.** This is preferably done via a **menu selection process**. Host computer 20 is aware of the identity of the particular local computer 10 and preferably offers the machine tool operator only those machine tool part programs that are proper for use by the corresponding machine tool(s) 5. Upon selection of a particular machine tool part program, host computer 20 transmits this machine tool part program to local computer 10 via computer network 60. Local computer 10 then stores this machine tool part program within random access memory 16. Running of the particular machine tool part program begins at its first program step."

Id., 14:5-25 (emphasis added).

> "The process of running the machine tool part program preferably involves a specification of the batch size. In addition, a batch number for management identification of a particular batch may also be provided. The number of parts in the batch is employed later in control of the machine tool operation. The setting of the batch size and batch I.D. are preferably events signaled to host computer 20. Other data for identification of the job for management reports may also be required. Entry of all this data preferably occurs within processing block 102."

Id., 14:26-36 (emphasis added).

> "Once this process is complete, then the machine tool operates according to the selected machine tool part program. This process involves a loop that repeats the steps necessary to machine a part until the machine tool part program is complete. Completion of the batch of parts involves the execution of the machine tool part program enough times to manufacture the number of parts specified by the batch

size."

Id., 14:37-44 (emphasis added).

The user interface is displayed upon completion of a program step after a program counter increments and after the program counter is exceeded.

"Update Window Display 104"

Id., Fig. 5.

"Subprogram 100 signals (sends a message to) the display program to **update a window display** of the operating program (processing block 104)."

Id., 14:53-55 (emphasis added).

"Subprogram 100 next tests to determine whether the just transmitted program step is a programmed significant event (decision block 105)."

Id., 15:1-3 (emphasis added).

"The present invention also provides the capability for marking other special events in the machine tool part program. An engineer or master machine tool operator charged with debugging or improving a machine tool part program thus may flag particular portions of the program in order to observe its operation during actual manufacture of parts."

Id., 15:12-18 (emphasis added).

"Whether a program event has been detected, subprogram 100 is signalled (sic) when a machine tool operator initiated event is received (decision block 107)."

Id., 15:29-31 (emphasis added).

Claim 30 next recites and Hutchins discloses "*means for storing an input received from the means for probing*." **Ex. PAT-A**, '565 Patent, 92:37-38 (emphasis added).

Hutchins discloses that memory stores the events recorded by the machine tool operator.

"As will be described below, an event is logged by identifying the type of event, date and time of occurrence and **storing this data in an event buffer within random access memory 16**."

Ex. PA-E, Hutchins, 13:17-20 (emphasis added).

"If such a program event is detected, then subprogram 100 logs this event

> (processing block 106). This process involves writing the identity and the date and time of occurrence of this event to the **reserved event buffer within random access memory 16**."

Id., 15:19-23 (emphasis added).

> "Upon detection of any such operator initiated event, the i**dentity and date and time are logged** (processing block 108) in the manner previously described."

Id., 15:48-51 (emphasis added).

Claim 30 next recites and Hutchins discloses "*means for transmitting the input to a server*." **Ex. PAT-A**, '565 Patent, 92:39 (emphasis added).

Hutchins discloses transmission of the recorded events stored in random access memory to the host computer ("server").

> "As explained above, a host communication program running on the local computer 10 is signalled (sic) about the logging of such an event and **transmits this event to host computer 20**."

Ex. PA-E, Hutchins, 15:24-28 (emphasis added).

> "Note that the host communications program **transmits any such logged event to host computer 20**."

Id., 15:50-52 (emphasis added).

v. <u>Claim 31</u>

Claim 31 should be rejected under 35 U.S.C. § 102(e) as unpatentable over Hutchins. Requestor provides a concise statement of the substantial new question of patentability for Claim 31 based on Hutchins under 35 U.S.C. § 102(e).

Please see attached Exhibit CC-E for a claim chart comparing Hutchins with Claim 31 of the '565 Patent under 35 U.S.C. § 102(e)

Claim 31 recites "*[t]he unit of claim 30*." **Ex. PAT-A**, '565 Patent, 92:40 (emphasis added). As shown in Section VII.A.5.u, Hutchins discloses the unit of claim 30.

Claim 31 next recites and Hutchins discloses "*means for monitoring the product for an occurrence in the product of a second trigger event of the predefined plurality of trigger events.*" *Id.*, 92:40-43 (emphasis added).

Hutchins discloses monitoring the local computer and machine tool for an occurrence in the product of the completion of a program step ("first trigger event") and the completion of a part program ("second trigger event").

> "Subprogram 100 next tests to determine **whether the just transmitted program step** is at the **end of the machine tool part program** (decision block 111). If this is not the end of the part program then the program counter is incremented (processing block 112)."

Ex. PA-E, Hutchins, 16:3-7 (emphasis added).

Claim 31 next recites and Hutchins discloses "*means for incrementing a value of a second counter corresponding to the second trigger event upon detection of the occurrence of the second trigger event in the product.*" **Ex. PAT-A**, '565 Patent, 92:44-46 (emphasis added).

Hutchins discloses incrementing a batch counter upon completion of a part program ("second trigger event").

> "Subprogram 100 then tests to determine whether the end of the batch has been reached. If the batch has not been reached then subprogram 100 i**ncrements the batch counter** (processing block 114) and resets the program counter to the beginning of the program (processing block 115)."

Ex. PA-E, Hutchins, 16:15-20 (emphasis added).

w. <u>Claim 32</u>

Claim 32 should be rejected under 35 U.S.C. § 102(e) as unpatentable over Hutchins. Requestor provides a concise statement of the substantial new question of patentability for Claim 32 based on Hutchins under 35 U.S.C. § 102(e).

Please see attached Exhibit CC-E for a claim chart comparing Hutchins with Claim 32 of the '565 Patent under 35 U.S.C. § 102(e)

Claim 32 recites "*[t]he unit of claim 30 [sic]*." **Ex. PAT-A**, '565 Patent, 92:47 (emphasis added). As shown in Section VII.A.5.v, Hutchins discloses the unit of claim 31.

Claim 32 next recites and Hutchins discloses "*means for storing the second counter on the device*." *Id.*, 92:48 (emphasis added).

Hutchins discloses a batch counter ("second counter") that is implemented in the local computer.

> "Subprogram 100 then tests to determine whether the end of the batch has been reached. If the batch has not been reached then subprogram 100 i**ncrements the batch counter** (processing block 114) and resets the program counter to the beginning of the program (processing block 115)."

Ex. PA-E, Hutchins, 16:15-20 (emphasis added). It is understood from this disclosure that the second counter is stored in memory.

Claim 32 next recites and Hutchins discloses "*means for transmitting the value of the second counter to the server*" **Ex. PAT-A**, '565 Patent, 92:49-50 (emphasis added).

Hutchins discloses signaling to the host computer that a batch has been completed ("value of the second counter").

> "The setting of the **batch size and batch I.D.** are preferably **events signaled to host computer 20**."

Ex. PA-E, Hutchins, 14:31-33 (emphasis added).

> "If the program has completed the end of the batch then subprogram 100 **signals host computer 20 that a batch has been completed**."

Id., 16:25-27 (emphasis added). It is understood from this disclosure that the value of the second counter is transmitted to the host computer.

VIII. CONCLUSION

The prior art presented here was either not previously considered by the Patent Office or not considered in the original prosecution as presented herein. Claims 1-11, 13-15, 17-22, and 25-32 of the '565 Patent are not patentable over this prior art. The prior art discloses, teaches or suggests the subject matter of the '565 Patent in such a manner that SNQs for Claims 1-11, 13-15, 17-22, and 25-32 are raised.

In view of the foregoing, Requestor respectfully submits that a substantial new question of patentability has been raised. Accordingly, Requestor requests that the Office grant this Request and initiate reexamination with special dispatch.

August 12, 2011

Respectfully submitted,

/Sanjeet K. Dutta/_____

Sanjeet K. Dutta
Reg. No. 46,145

KING & SPALDING LLP
P.O. Box 889
Belmont, California 94002-0889
(650) 590-0730

Attorney for:
Google Inc.

CERTIFICATE OF SERVICE

The undersigned hereby certifies that a copy of this Request for *Inter Partes* reexamination, together with all exhibits and attachments and supporting documentation, has been served via Express Mail on the 12th day of August, 2011, upon the following:

Lawrence Aaronson
McKeon Meunier Carlin & Curfman, LLC
817 West Peachtree Street, Suite 900
Atlanta, Georgia 30308

Susie Patino