EXHIBIT C

US006704032B1

(12) **United States Patent**
Falcon et al.

(10) **Patent No.: US 6,704,032 B1**
(45) **Date of Patent: Mar. 9, 2004**

(54) **METHODS AND ARRANGEMENTS FOR INTERACTING WITH CONTROLLABLE OBJECTS WITHIN A GRAPHICAL USER INTERFACE ENVIRONMENT USING VARIOUS INPUT MECHANISMS**

(75) Inventors: **Stephen R. Falcon**, Woodinville, WA (US); **Richard St. Clair Bailey**, Bellevue, WA (US); **Dan Banay**, Seattle, WA (US)

(73) Assignee: **Microsoft Corporation**, Redmond, WA (US)

(*) Notice: Subject to any disclaimer, the term of this patent is extended or adjusted under 35 U.S.C. 154(b) by 377 days.

(21) Appl. No.: **09/699,898**

(22) Filed: **Oct. 27, 2000**

(51) **Int. Cl.**[7] **G06F 13/00**
(52) **U.S. Cl.** **345/746**; 345/765
(58) **Field of Search** 345/746, 765, 345/767, 802, 822, 821; 701/2

(56) **References Cited**

U.S. PATENT DOCUMENTS

5,673,401 A * 9/1997 Volk et al. 725/139
5,687,331 A * 11/1997 Volk et al. 345/840
5,821,935 A * 10/1998 Hartman et al. 345/839
6,201,540 B1 * 3/2001 Gallup et al. 345/764

* cited by examiner

Primary Examiner—Cao (Kevin) Nguyen
(74) *Attorney, Agent, or Firm*—Lee & Hayes, PLLC

(57) **ABSTRACT**

Improved methods and arrangements provide user interface platforms that are capable of meeting the unique requirements of manufacturers, while also advantageously supporting the development of independently designed software applications. In accordance with certain aspects of the present invention, methods and arrangements are provided whereby certain key events are defined and operatively associated with the hardware suite. These key events, which are essentially virtual events, can be invoked or otherwise implemented by the manufacturers and independent software vendor (ISV) applications. These key events are categorized as being either determinate events or indeterminate events, and their functionality can be based on different behavior models. The behavior models consider the notion that the user interface will most likely include various focusing (e.g., function selection) and/or editing (e.g., parameter modifying) capabilities. As such, the methods and arrangements can support several different behavior models, including, for example, a full-focus mode, a focus-free mode, and an edit-free mode.

41 Claims, 8 Drawing Sheets

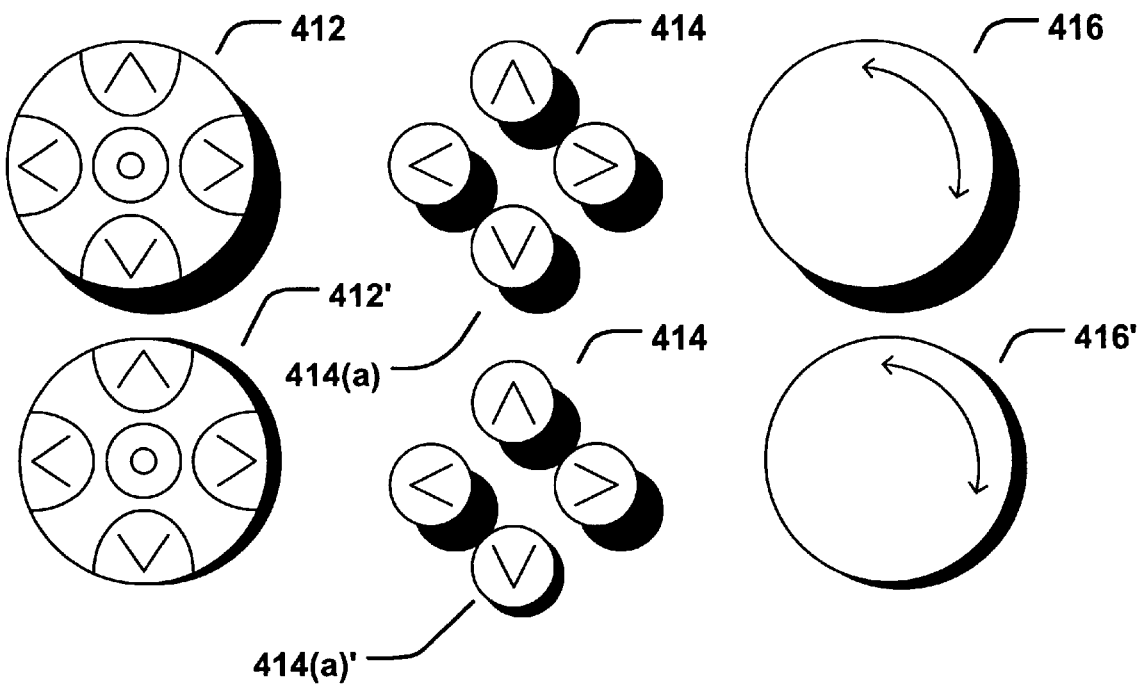

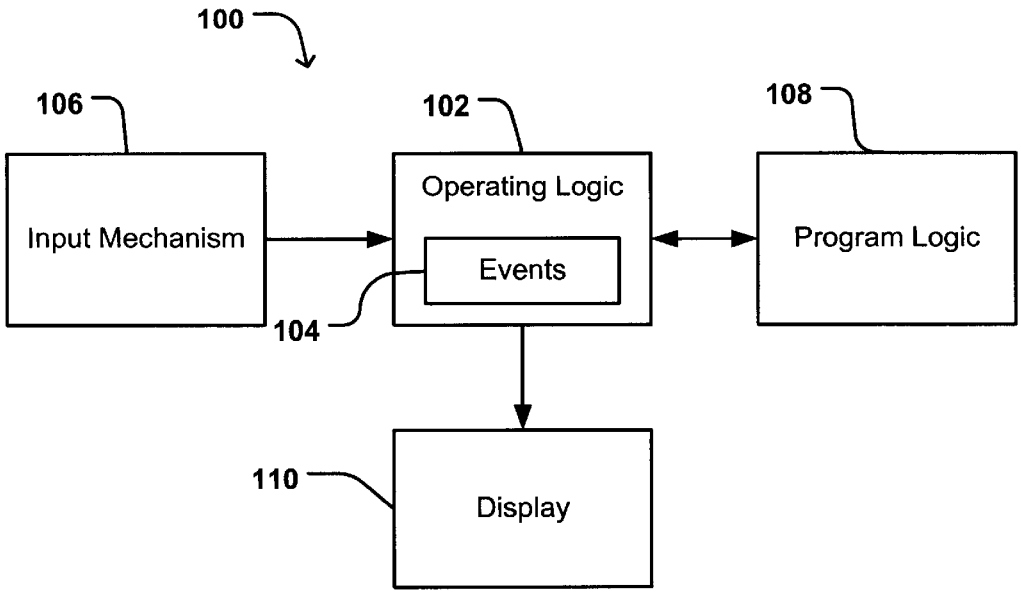
100
106
102
108
Input Mechanism
Operating Logic
Events
Program Logic
104
110
Display

Fig. 1

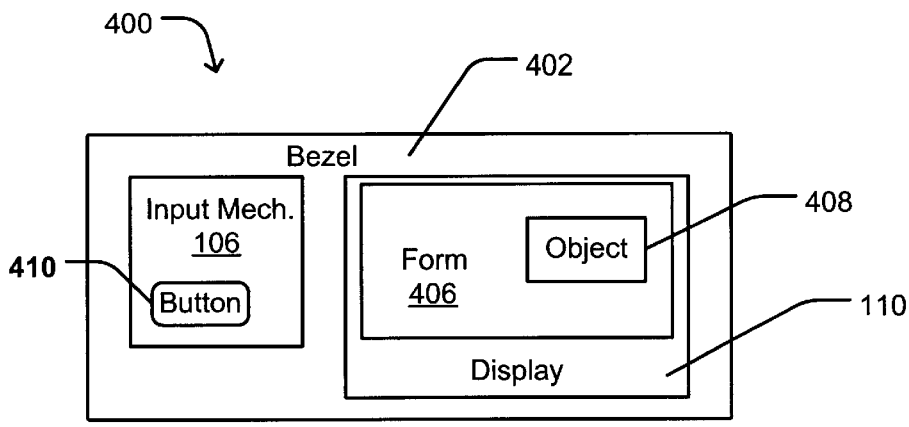
400
402
Bezel
Input Mech.
106
410
Button
Form
406
Object
408
110
Display

Fig. 3

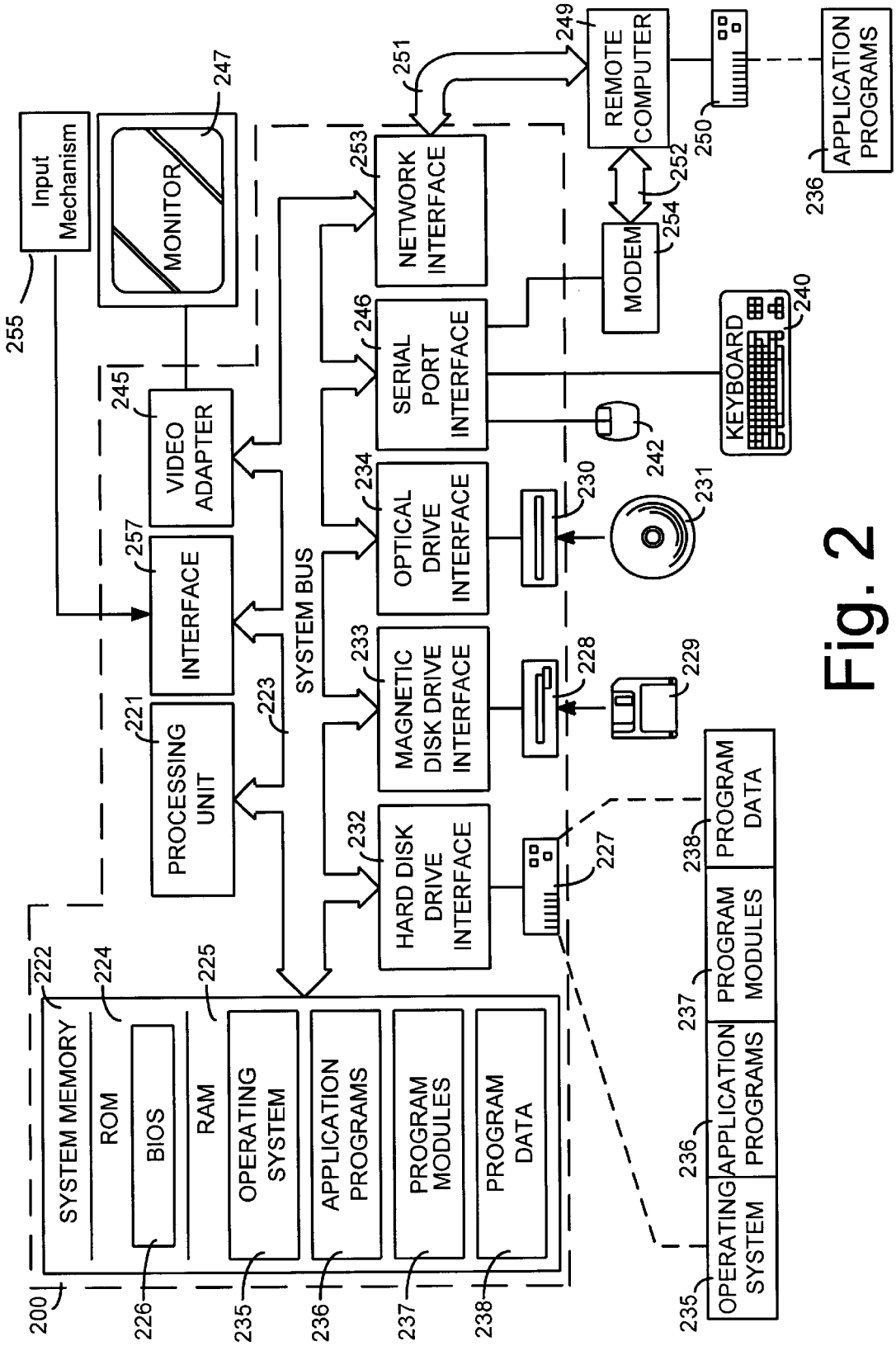
Input Mechanism
255
MONITOR
247
VIDEO ADAPTER
245
INTERFACE
257
PROCESSING UNIT
221
223
SYSTEM BUS
NETWORK INTERFACE
253
SERIAL PORT INTERFACE
246
OPTICAL DRIVE INTERFACE
234
MAGNETIC DISK DRIVE INTERFACE
233
HARD DISK DRIVE INTERFACE
232
251
REMOTE COMPUTER
249
250
252
MODEM
254
APPLICATION PROGRAMS
236
KEYBOARD
240
242
230
231
228
229
227
SYSTEM MEMORY
222
ROM
224
BIOS
226
RAM
225
OPERATING SYSTEM
235
APPLICATION PROGRAMS
236
PROGRAM MODULES
237
PROGRAM DATA
238
200
OPERATING SYSTEM
235
APPLICATION PROGRAMS
236
PROGRAM MODULES
237
PROGRAM DATA
238

Fig. 2

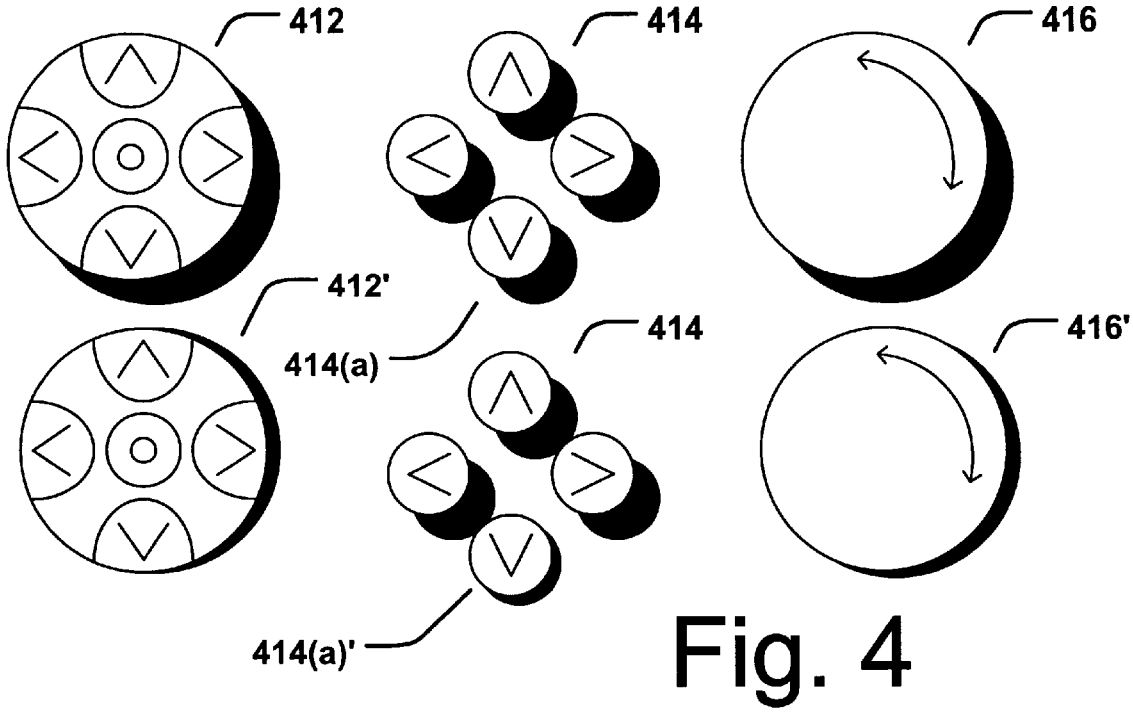
412
414
416
412'
414(a)
414
416'
414(a)'

Fig. 4

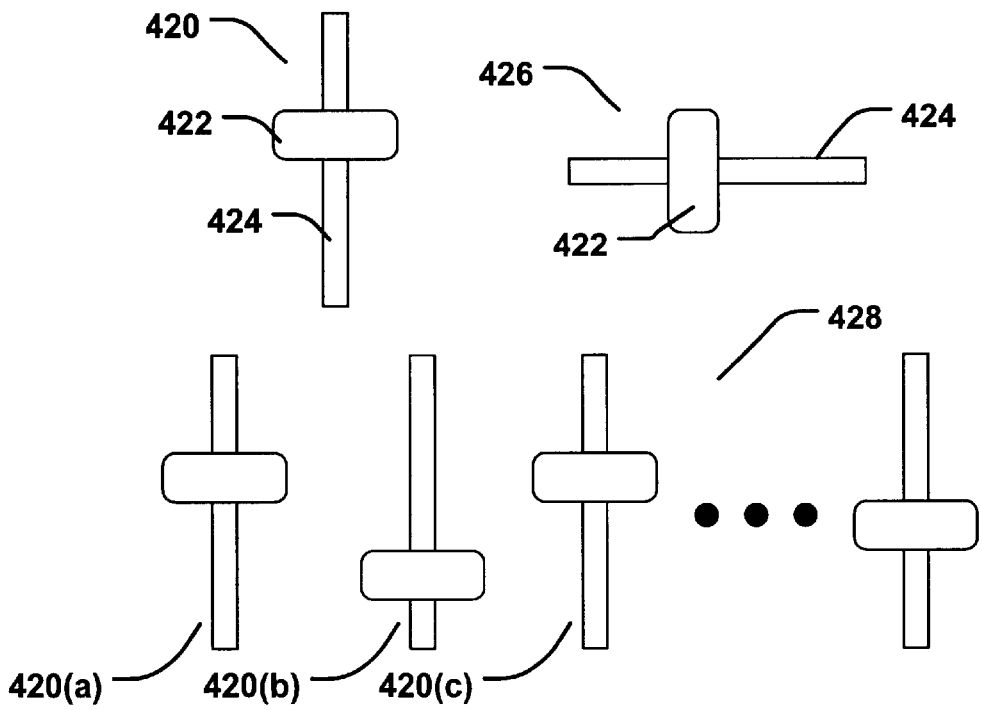
420
422
424
426
424
422
428
420(a)
420(b)
420(c)

Fig. 5

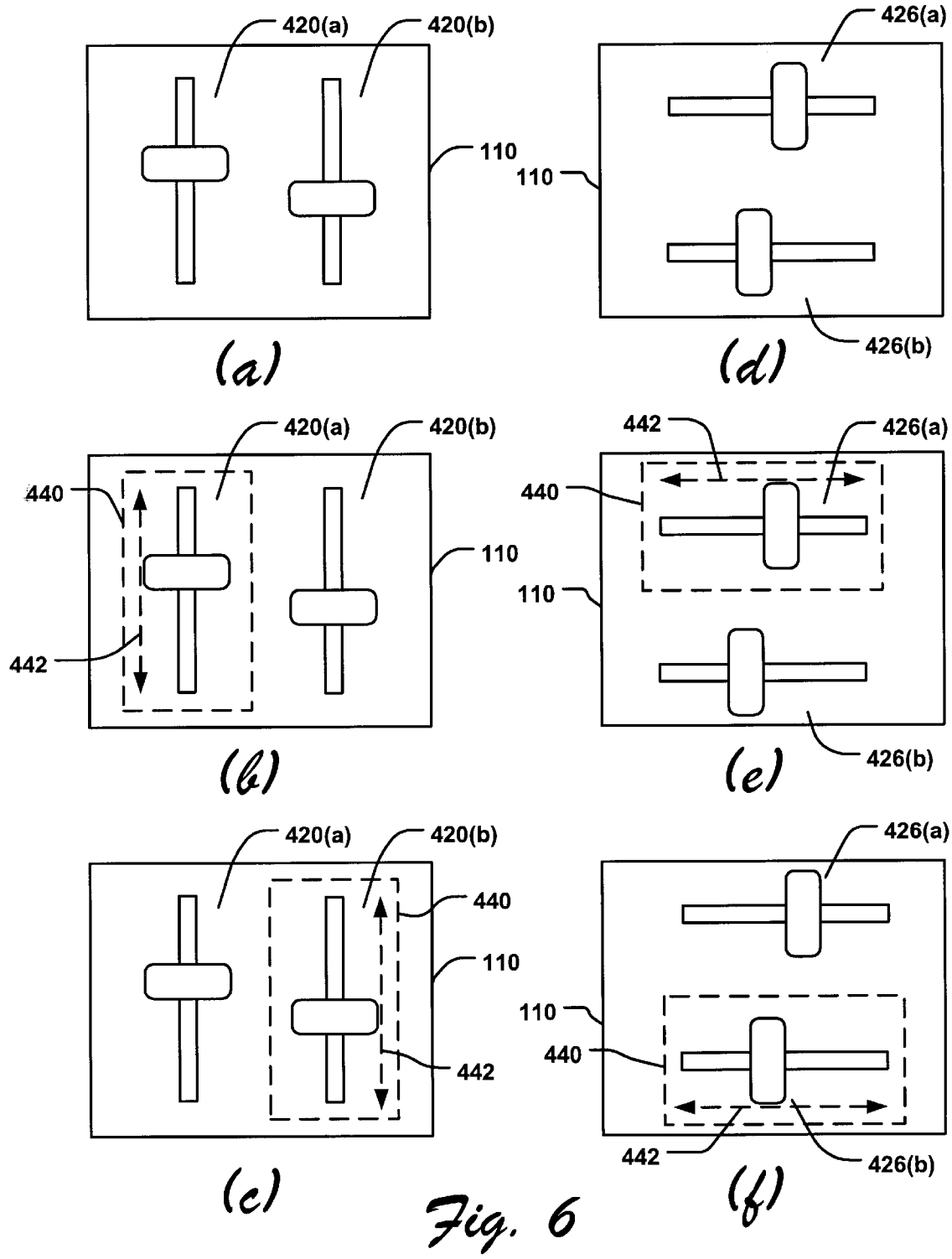
420(a)
420(b)
110
(a)
426(a)
110
426(b)
(d)
420(a)
420(b)
440
110
442
(b)
442
426(a)
440
110
426(b)
(e)
420(a)
420(b)
440
110
442
(c)
426(a)
110
440
442
426(b)
(f)

Fig. 6

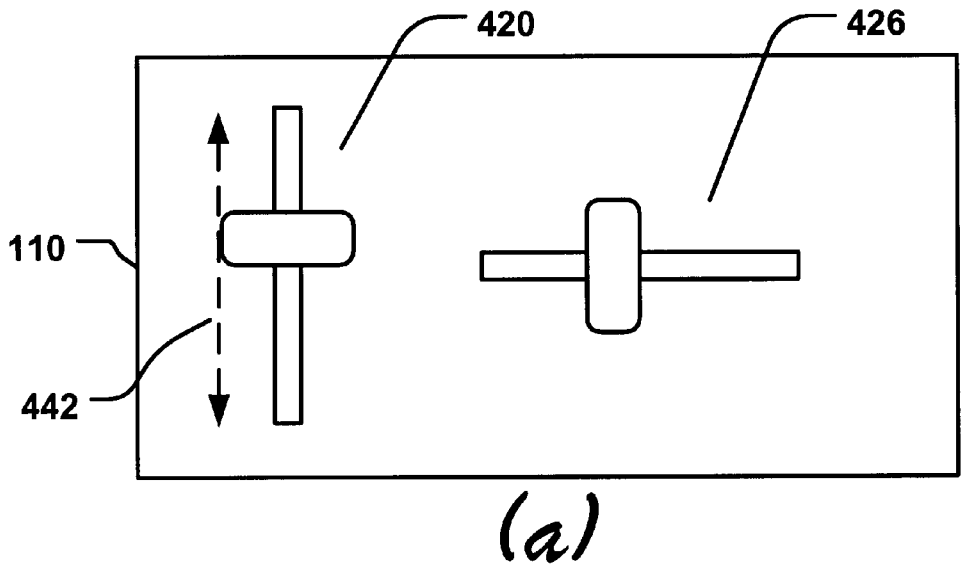

(a)

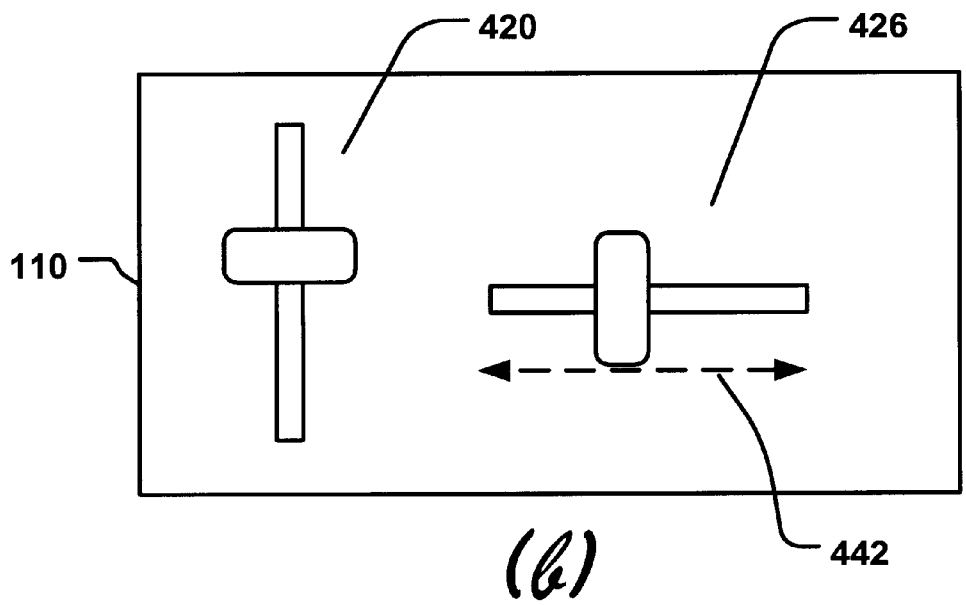

(b)

Fig. 7

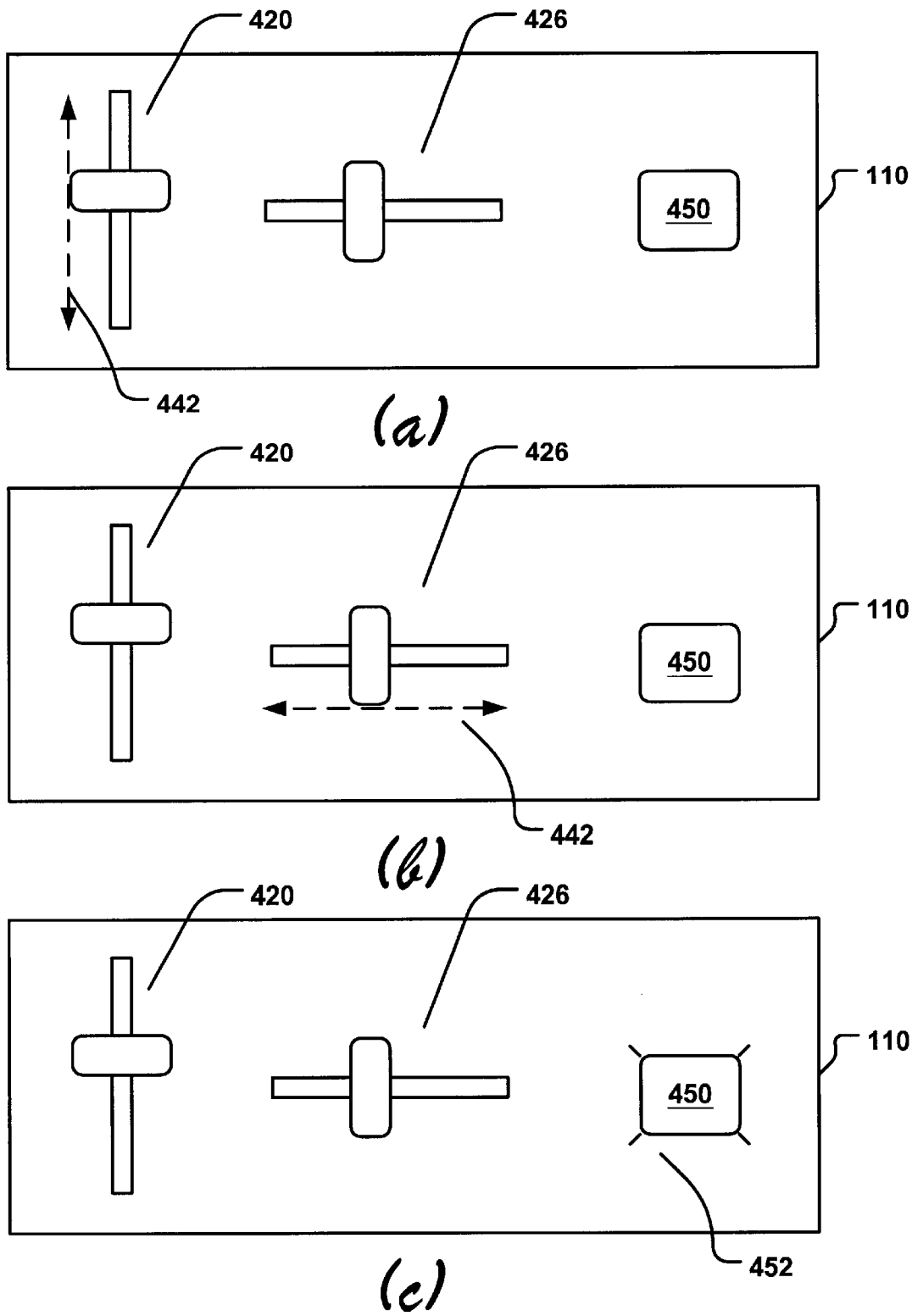

Fig. 8

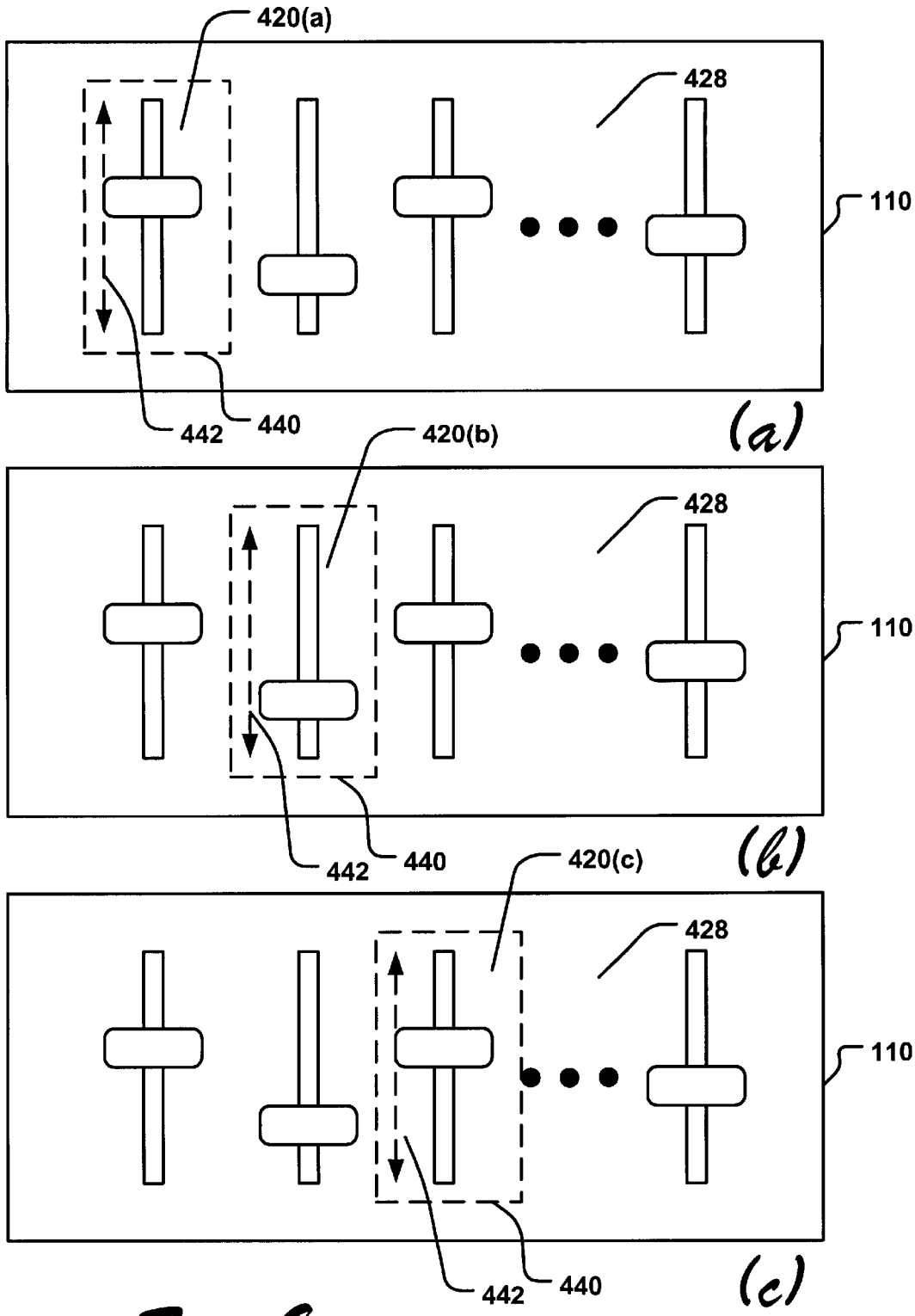
420(a)
428
110
442
440
(a)
420(b)
428
110
442
440
(b)
420(c)
428
110
442
440
(c)

Fig. 9

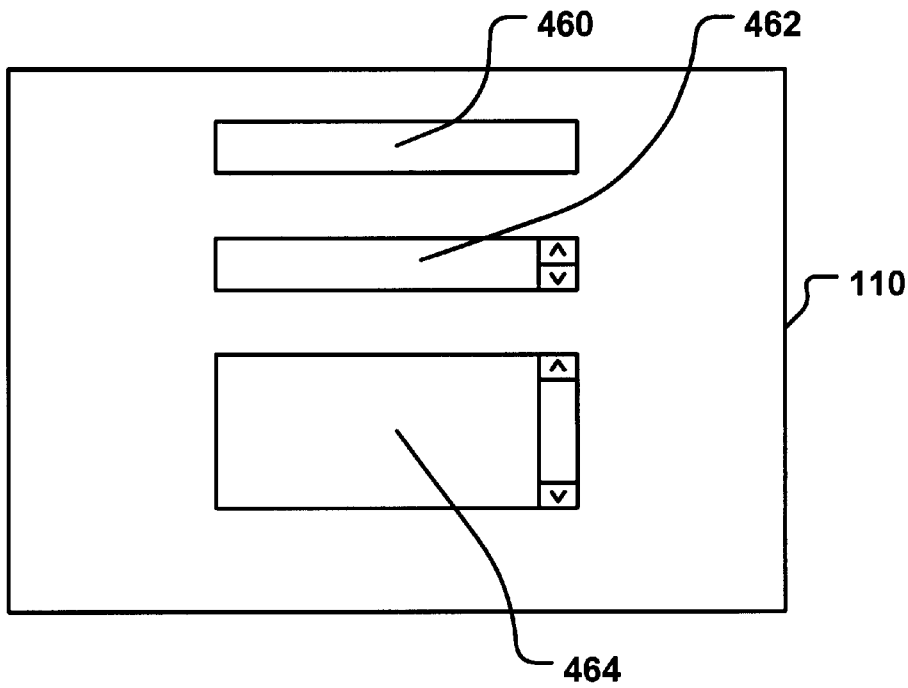
460
462
110
464

Fig. 10

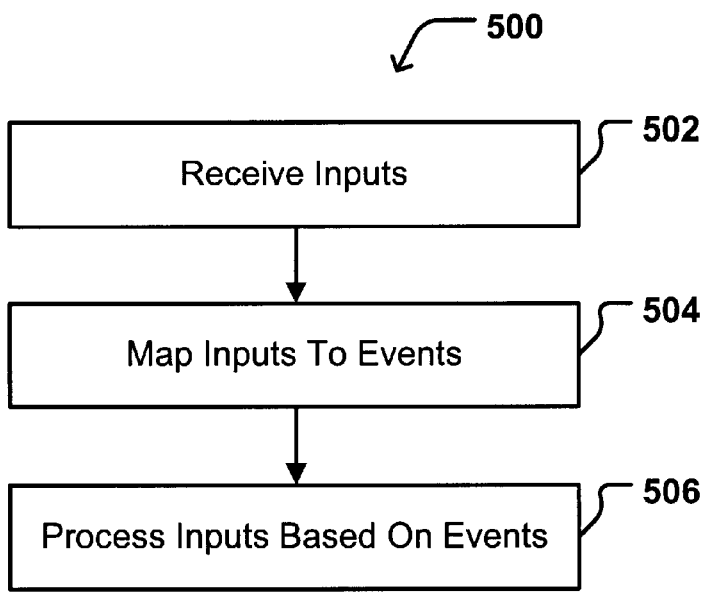
500
Receive Inputs
502
Map Inputs To Events
504
Process Inputs Based On Events
506

Fig. 11

METHODS AND ARRANGEMENTS FOR INTERACTING WITH CONTROLLABLE OBJECTS WITHIN A GRAPHICAL USER INTERFACE ENVIRONMENT USING VARIOUS INPUT MECHANISMS

TECHNICAL FIELD

This invention relates to graphical user interfaces (GUIs), and more particularly to methods and arrangements that support the interaction of the user, through a variety of different types of input mechanisms, with different types of controllable objects displayed within a GUI environment.

BACKGROUND

Graphical user interfaces (GUIs) are popular in a variety of computing applications and/or operating systems. A typical GUI provides visual feedback to the user of his or her actions (e.g., inputs and responses thereto).

There is an ongoing move to make devices or other types of appliances seemingly "smarter" or at least more user friendly by introducing similar graphical interfaces and like capabilities. Thus, for example, kiosks, automatic teller machines, microwave ovens, video cassette recorders (VCRs), cellular telephones, and the like are beginning to provide GUIs that are programmed to enrich the user's interactions with the device or appliance. This may include, for example, adding selectable icons, scrollable lists, and hierarchical forms or pages.

More interestingly for this background section, in certain instances, physical user interfaces, such as, e.g., knobs, buttons, switches, handles, and the like, can be graphically modeled and included within the graphical user interface as selectable/movable objects. Hence, a user can graphically open a closed drawer, turn up/down a volume control, or perhaps select a feature, product or service.

Causing such an action to occur typically requires the user to provide the requisite user inputs to the controlling operating logic. This may include physically moving and/or activating an input mechanism, such as, e.g., a mouse, a trackball or the like, which provides corresponding user input signals to the operating logic, directly or indirectly. The operating logic (e.g., an operating system software and associated hardware suite) may also be configured to interact with other program logic (e.g., application software).

Another common type of physical input device is a touch pad or touch screen. Touch screens are usually configured to allow the user to touch an exposed surface on a cathode ray tube (CRT), liquid crystal display (LCD), plasma display, or the like, through which the GUI environment and the controllable objects are visible. Here, the user may touch the exposed surface with his or her finger or some other object, such as, e.g., a stylus. The touch screen includes a detection mechanism (e.g., an electrically detectable grid array) configured to detect the point of contact on the exposed surface and to provide this positional information to the operating logic. Provided with this positional information, the operating logic and/or program logic can determine which controllable object, the user is attempting to select, move, alter, or otherwise influence.

Manufacturers of various systems and devices tend to invest significant resources into the development of functional and often aesthetically pleasing physical and/or virtual user interfaces. These manufacturers, e.g., original equipment manufacturers (OEMs), usually have a preferred style

for their user interface and associated functionality that usually differentiates their product, at least commercially, from their competitor's products.

Having a wide variety of user interfaces can prove challenging to independent software developers and others attempting to produce software products that run on a variety of devices. By way of example, automobile computer manufacturers have a strong desire to maintain control over the user interaction model their products exhibit. This has historically provided a significant barrier to the development of user-interface platform technology that supports running independently designed software applications on such OEM products. One of the problems in this exemplary industry is that different OEMs implement different hardware input schemes. For example, one manufacturer may favor using a single rotating knob with an enter/action button for navigation of their product's GUI form, whereas another might favor a directional pad (up, down, left, right) and an enter/action key.

Consequently, there is a need for improved methods and arrangements that provide user interface platforms that are capable of meeting the varying interface requirements of manufacturers, while also promoting the development of independently designed software applications.

SUMMARY

Improved methods and arrangements provide user interface platforms that are capable of meeting the unique requirements of manufacturers, while also advantageously supporting the development of independently designed software applications.

In accordance with certain aspects of the present invention, methods and arrangements are provided whereby certain key events are defined and operatively associated with the hardware suite. These key events, which are essentially virtual events, can be invoked or otherwise implemented by the manufacturers and independent software vendor (ISV) applications. These key events are categorized as being either determinate events or indeterminate events, and their functionality can be based on different behavior models.

The behavior models consider the notion that the user interface will most likely include various focusing (e.g., function selection) and/or editing (e.g., parameter modifying) capabilities. As such, the methods and arrangements can support several different behavior models, including, for example, a full-focus mode, a focus-free mode, and an edit-free mode.

BRIEF DESCRIPTION OF THE DRAWINGS

A more complete understanding of the various methods and arrangements of the present invention may be had by reference to the following detailed description when taken in conjunction with the accompanying drawings wherein:

FIG. **1** is block diagram depicting an exemplary device having a user input mechanism, a display device, operating logic, and program logic, suitable for use with certain implementations of the present invention.

FIG. **2** is a block diagram depicting an exemplary computer environment that is suitable for use with certain implementations of the present invention.

FIG. **3** is a graphical illustration of a frontal view of an exemplary device, as in FIG. **1**, having a user input mechanism and a display.

FIG. **4** is a graphical illustration of a plurality of exemplary input mechanisms suitable for use in the device of FIG. **1**.

FIG. **5** is a graphical illustration of a plurality of exemplary controllable objects suitable for display by the device of FIG. **1**.

FIGS. **6**(*a–f*) demonstratively illustrate certain exemplary methods associated with a full-focus behavior model in which controllable objects, as in FIG. **5**, are selectively brought into focus and the object/form is selectively placed into an edit mode through user inputs.

FIGS. **7**(*a–b*) demonstratively illustrate certain exemplary methods associated with a focus-free behavior model in which controllable objects, as in FIG. **5**, are inherently in focus for selected events and edited through user inputs with the object/form in edit mode.

FIGS. **8**(*a–c*) demonstratively illustrate certain further exemplary methods associated with a focus-free behavior model in which controllable objects, as in FIG. **5** and FIG. **1**, are inherently in focus for selected events and edited through user inputs with the object/form in edit mode.

FIGS. **9**(*a–c*) demonstratively illustrate certain exemplary methods associated with a edit-free behavior model in which controllable objects, as in FIG. **5**, are selectively brought into focus and edited through user inputs with the object/form in edit mode.

FIG. **10** demonstratively illustrates a plurality of additional exemplary controllable objects suitable for display by the device of FIG. **1**.

FIG. **11** is a flow-chart depicting a method for mapping user inputs to key events in accordance with certain exemplary implementations of the present invention.

DETAILED DESCRIPTION

In FIG. **1** a device **100** is depicted as including operating logic **102** wherein certain key events **104** have been defined. Operating logic **102** is operatively coupled to at least one user input mechanism **106** and a display device **110**. Additionally, program logic **108** is operatively configured to function with operating logic **102**.

Device **100** can be any device, including, for example, a stand alone device, a peripheral device, an appliance, a hand-held device, an entertainment device, a communication device, a portable device, etc., that is designed to present the user with a GUI environment having controllable objects, features or functions.

With this in mind, in accordance with certain exemplary implementations, device **100** can include a computer, for example, as described below and shown in FIG. **2**.

Operating logic **102** can include hardware components, software components, or a mixture thereof. For example, in certain implementations operating logic **102** includes processing and memory hardware (not shown), wherein the processing hardware is responsive to operating system and other software instructions as stored within the memory or as otherwise provided.

Regardless of form, in accordance with certain exemplary implementations, operating logic **102** is essentially programmable to receive user inputs from input mechanism **106**, and map the user inputs to key events that can be processed per instruction from within operating logic **102** and/or program logic **108**. Certain processed key events will modify the functioning of device **100** in some way.

Input mechanism **106** includes at least one physical user input device, such as, e.g., an electrical switch, a mechanical switch, an optical switch, a thermal switch, a transducer, a touch pad, a keypad, a button, a rotating knob, a push knob, a pull knob, a directional pad, a toggle switch, a joystick, or the like. Hence, input mechanism **106** allows the user to initiate an event that is detectable by operating logic **102**.

Program logic **108** may also include hardware components, software components, or a mixture thereof. However, for simplicity the remainder of this description assumes that program logic **108** is essentially a software product.

Display **110** can include any conventional display or monitor, including, e.g., a cathode ray tube (CRT), a liquid crystal display (LCD), a plasma display, a projector, a light display, etc. Though depicted as functionally separate in FIG. **1**, display device **110** may also be both operatively and physically associated with input mechanism **106**, as is often the situation with touch screens and the like.

Reference is now made to FIG. **2**, which is a block diagram of an exemplary computing system **200**.

Computing system **200** is, in this example, a personal computer (PC), however, in other examples computing system may take the form of a special-purpose device, an appliance, a handheld computing device, a cellular telephone device, a pager device, etc. Moreover, the arrangement in FIG. **1** can be distributed between a plurality of computers/devices.

As shown, computing system **200** includes a processing unit **221**, a system memory **222**, and a system bus **223**. System bus **223** links together various system components including system memory **222** and the processing unit **221**. System bus **223** may be any of several types of bus structures including a memory bus or memory controller, a peripheral bus, and a local bus using any of a variety of bus architectures. System memory **222** typically includes read only memory (ROM) **224** and random access memory (RAM) **225**. A basic input/output system **226** (BIOS), containing the basic routine that helps to transfer information between elements within computing system **200**, such as during start-up, is stored in ROM **224**. Computing system **200** further includes a hard disk drive **227** for reading from and writing to a hard disk, not shown, a magnetic disk drive **228** for reading from or writing to a removable magnetic disk **229**, and an optical disk drive **30** for reading from or writing to a removable optical disk **231** such as a CD ROM or other optical media. Hard disk drive **227**, magnetic disk drive **228**, and optical disk drive **230** are connected to system bus **223** by a hard disk drive interface **232**, a magnetic disk drive interface **233**, and an optical drive interface **234**, respectively. These drives and their associated computer-readable media provide nonvolatile storage of computer readable instructions, data structures, computer programs and other data for computing system **200**.

A number of computer programs may be stored on the hard disk, magnetic disk **229**, optical disk **231**, ROM **224** or RAM **225**, including an operating system **235**, one or more application programs **236**, other programs **237**, and program data **238**.

A user may enter commands and information into computing system **200** through various input devices such as a keyboard **240** and pointing device **242** (such as a mouse, etc.). An additional input mechanism(s) **255** can also be included via an appropriate interface **257**.

As shown, a monitor **247** or other type of display device is also connected to the system bus **223** via an interface, such as a video adapter **245**. In addition to the monitor, computing system **200** may also include other peripheral output devices (not shown), such as speakers, printers, etc.

Computing system **200** may operate in a networked environment using logical connections to one or more

remote computers, such as a remote computer **249**. Remote computer **249** may be another personal computer, a server, a router, a network PC, a peer device or other common network node, and typically includes many or all of the elements described above relative to computing system **200**, although only a memory storage device **250** has been illustrated in FIG. **2**.

The logical connections depicted in FIG. **2** include a local area network (LAN) **251** and a wide area network (WAN) **252**. Such networking environments are commonplace in offices, enterprise-wide computer networks, Intranets and the Internet.

When used in a LAN networking environment, computing system **200** is connected to the local network **251** through a network interface or adapter **253**. When used in a WAN networking environment, computing system **200** typically includes a modem **254** or other means for establishing communications over the wide area network **252**, such as the Internet. Modem **254**, which may be internal or external, is connected to system bus **223** via the serial port interface **246**.

In a networked environment, computer programs depicted relative to the computing system **200**, or portions thereof, may be stored in the remote memory storage device. It will be appreciated that the network connections shown are exemplary and other means of establishing a communications link between the computers may be used.

Reference is now made to FIG. **3**, which graphically depicts an exemplary device in the form of an automobile computer **400** suitable for mounting in a dashboard location. As viewed from the front, automobile computer **400** includes a bezel **402** providing access to at least one input mechanism **106** and display **110**. Here, for example, input mechanism **106** includes an action button **410**. Action button **410** may be associated a variety of actions, including, e.g., navigating a displayed GUI environment or form **406**, selecting a feature/function, entering data, or the like.

As shown, display **110** includes a GUI environment or form **406** having a controllable object **408** displayed therein. Controllable object **408** can take a variety of forms, including, e.g., information input objects, controllable indicator objects, virtual button objects, virtual switch objects, virtual keypad objects, virtual panel objects, etc.

FIG. **4** depicts certain exemplary input mechanisms, suitable for use as input mechanism **106**. The first example is a directional pad **412** that allows the user to selectively navigate through form **406** and/or otherwise selectively control controllable object **408**. Here, as depicted in the upper example, directional pad **412** allows for up, down, left, and right input selections. In certain implementations, directional pad **412** may also provide for an action input by allowing the user to push inward at the center. This type of activation is graphically demonstrated in the lower example of directional pad **412'**.

The next example in FIG. **4** is a set of directional buttons **414** that together provide navigational inputs. In the upper example directional button (down) **414**(*a*) is not activated, while in the lower example **414**(*a*)' is activated.

In another example of FIG. **4**, a rotating knob **416** is depicted. Here, rotating knob **416** is demonstrated as being a push-knob because it can be depressed in addition to be rotated. When knob **416'** is depressed by the user, for example, as demonstrated in the lower example, the user is able to provide an action input. Hence, a user can navigate about an appropriately configured form **406** by selectively rotating the knob and pushing the knob inward.

FIG. **5** illustrates certain exemplary controllable objects **408** in the form of sliders. The first example is a virtual vertical slider **420**. Here, a thumb **422** is can be adjusted or moved along channel **424** to modify operating parameters, select features/functions, etc. The next example is a virtual horizontal slider **426**, which is essentially vertical slider **420** rotated 90 degrees to one side. Hence, horizontal slider **426** also includes a thumb **422** that travels along a channel **424**. The remaining example in FIG. **5** is a virtual row of vertical sliders **428** that includes a plurality of vertical sliders **420**, such as, vertical sliders **420**(*a–c*).

Improved methods and arrangements will now described whereby virtual key events **104** are operatively associated with input mechanism **106**. This scheme allows program logic **108** to be designed to interpret events **104** in a manner that remains faithful to a desired interaction model associated with device **100**. Thus, for example, an OEM is able to design a unique hardware user interface to work in conjunction with the controllable object(s) **408**, without compromising application compatibility or user-interface consistency.

By way of example, let us assume that program logic **108** is a graphic equalizer having a row of vertical sliders **428**. By implementing this scheme the graphic equalizer program could run on devices having a touch screen input mechanism, and also on devices having a push-knob input mechanism.

Key events **104** come in two varieties. The first variety is termed "determinate" in that the resulting control action is always intended to be the same, regardless of an edit state associated with either a controllable object **408** or form **406**. The second variety is termed "indeterminate" in that the resulting control action varies based on the edit state.

In accordance with certain exemplary implementations, determinate key events include focus adjusting events, such as, e.g., focus right, focus left, focus up, focus down, focus upper right, focus lower left, focus upper left, focus lower right. The determinate key events also include value adjusting events, such as, e.g., value right, value left, value up, value down, value increment, value decrement. Certain edit key events are also determinate key events, such as, e.g., enter edit mode and exit edit mode; as are certain focus key events such as, focus next and focus previous. Indeterminate key events can include key events such as right, left, up, down, and other key events such as, e.g., advance, decline, and action.

In accordance with certain aspects, an OEM, for example, provides a driver program that is configured to map input mechanism **106** to the key events **104**, according to the OEM's desired interaction model. For example, a rotating knob could generate Advance/Decline events, a directional pad could generate Right/Left/Up/Down events, and/or an enter button could generate an Action event. Likewise, a combination directional pad and rotating knob could generate Focus Right/Left/Up/Down and Value Increment/Decrement events, respectively. Combination "move" and "adjust" knobs could generate Focus Next/Previous and Value Increment/Decrement events, respectively. In still another example, combination Enter/Back buttons would generate Enter/Escape events, respectively.

Preferably, each controllable object (e.g., **408**) is configured to respond to all applicable key events. Thus, for example, horizontal slider **426** (see FIG. **5**) could be configured as follows:

Determinate Key Events:	
Focus Right	'no-op
Focus Left	'no-op
Focus Up	'no-op
Focus Down	'no-op
Focus UpperRight	'no-op
Focus LowerLeft	'no-op
Focus UpperLeft	'no-op
Focus Lower Right	'no-op
Focus Next	'no-op
Focus Previous	'no-op
Value Right = increase value	
Value Left = decrease value	
Value Up	'no-op
Value Down	'no-op
Value Increment = increase value	
Value Decrement = decrease value	
Enter Edit = enter edit mode	
Exit Edit = exit edit mode	
Indeterminate Key Events:	
Right = if edit mode, increase value	
Left = if edit mode, decrease value	
Up = if edit mode, increase value	
Down = if edit mode, decrease value	
Advance = if edit mode, increase value	
Decline = if edit mode, decrease value	
Action = if edit mode, exit; if non-edit mode, enter edit mode	

There are several types of operational behavior models that can be supported through the proper selection of key events and responses thereto. In a first example, a full-focus behavior model will be illustrated with references to FIGS. **6**(*a–f*).

In FIG. **6**(*a*) a display **110** is shown as having two vertical sliders, i.e., controllable objects **420**(*a*) and **420**(*b*). Since there are two sliders in this example, the user needs to be able to select between them. In accordance with certain exemplary implementations, a "focus" capability is provided wherein applicable user inputs are associated with changing the focus or selection between controllable objects.

This focus capability associated with the exemplary full-focus behavior model is illustrated in FIGS. **6**(*b*) and **6**(*c*). In FIG. **6**(*b*), operating logic **102** and/or program logic **108** have interpreted focus key events as placing controllable object (slider) **420**(*a*) in focus as illustrated by surrounding dashed line box **440**. Placing controllable object **420**(*a*) in focus may be accompanied by some graphical change thereto; for example, the object may be highlighted or brightened in some way. Next, in FIG. **6**(c), focus has moved to controllable object (slider) **420**(b) as illustrated by surrounding dashed line box **440**.

FIGS. **6**(*d–f*) are similar to FIGS. **6**(*a–c*), respectively, for two horizontal slider controllable objects **426**(*a*) and **426**(*b*). As shown, in FIG. **6**(*e*), controllable object **426**(*a*) has been placed in focus as illustrated by surrounding dashed line box **440**. In FIG. **6**(*f*), focus has moved to controllable object (slider) **426**(*b*), again as illustrated by surrounding dashed line box **440**.

In the exemplary full-focus behavior model, once the user has selected a controllable object by placing the object in focus, then the controllable object and/or form needs to be placed in an "edit mode" that allows the controllable object to be controlled, e.g., to modify/change values associated with the controllable object. Determinate key events are provided for entering/exiting edit mode. The edit mode can be associated with controllable objects and/or the form. Referring to FIGS. **6**(*b–c*) and FIGS. **6**(*e–f*), an edit mode has been illustrated by dashed directional arrow **442**. Thus, for example, in FIG. **6**(*b*) controllable object **420**(*a*) is in focus (box **440**) and the controllable object is in edit mode (arrow **442**). In FIG. **6**(*c*), controllable object **420**(*b*) is in focus (box **440**) and in edit mode (arrow **442**). Similarly, the presence of arrow **440** in FIGS. **6**(*e*) and **6**(*f*) place the controllable object (that is in focus) in edit mode.

Another operational behavior model is a "focus-free" model. An exemplary focus-free model is illustrated in FIGS. **7**(*a–b*). In FIG. **7**(*a*), display **110** includes a form having a vertical slider controllable object **420** and a horizontal slider controllable object **426**. As should be apparent from this illustration, an up or down key events need only be operatively associated with vertical slider controllable object **420**. Likewise, left or right key events need only be operatively associated with horizontal slider controllable object **426**. Consequently, in this example, there is no reason to require the user to place a controllable object into focus, hence the name focus-free.

The controllable objects/form is essentially, inherently in an edit mode for selected key events, as illustrated by dashed arrows **442** in FIGS. **7**(*a–b*). In FIG. **7**(*a*) controllable object **420** is shown as being editable. In FIG. **7**(*b*) controllable lo object **426** is shown as being editable. In certain implementations, the controllable objects are configured to support event "focus-free" properties that determine for select determinate or indeterminate events, whether the controllable object should always receive the key events regardless of any current focus.

For FIGS. **7**(*a–b*), for example, the controllable objects could be operatively configured as follows:

```
(1) The horizontal slider's properties are set as follows:
FocusFreeRightLeft = True;  //control always gets Right and Left events.
EditFreeRight = True;       //indeterminate Right always increases value.
EditFreeLeft = True;        //indeterminate Left always decreases value.
EditFreeUp = False;         //if edit mode, increase value.
EditFreeDown = False;       //if edit mode, decrease value.
EditFreeAdvance = False;    //if edit mode, increase value.
EditFreeDecline = False;    //if edit mode, decrease value.
(2) The vertical slider's properties are set as follows:
FocusFreeUpDown = True;     //control always gets Up and Down events.
EditFreeRight = False;      //if edit mode, increase value.
EditFreeLeft = False;       //if edit mode, decrease value.
EditFreeUp = True;          //indeterminate Up always increases value.
EditFreeDown = True;        //indeterminate Down always decreases
                            value.
EditFreeAdvance = False;    //if edit mode, increase value.
EditFreeDecline = False;    //if edit mode, decrease value.
```

FIGS. **8**(*a–c*) each depict yet another example of a form that could implement a focus-free behavior model. Here, in addition to controllable objects **420** and **426**, as in FIGS. **7**(*a–b*), an additional virtual action button **450** has been included in the form on display **110**.

As illustrated by dashed arrows **442**, vertical slider controllable object **420** is editable in FIG. **8**(*a*) and horizontal slider controllable object **426** is editable in FIG. **8**(*b*). In FIG. **8**(*c*) virtual action button **450** is editable as illustrated by lines **452** extending outwardly.

For FIGS. **8**(*a–c*), for example, the controllable objects could be operatively configured as follows:

```
(1) The horizontal slider's properties are set as follows:
FocusFreeRight = True;      //slider always gets Right event.
FocusFreeLeft = True;       //slider always gets Left event.
EditFreeRight = True;       //indeterminate Right always increases value.
EditFreeLeft = True;        //indeterminate Left always decreases value.
EditFreeUp = False;         //if edit mode, increase value.
EditFreeDown = False;       //if edit mode, decrease value.
EditFreeAdvance = False;    //if edit mode, increase value.
EditFreeDecline = False;    //if edit mode, decrease value.
(2) The vertical slider's properties are set as follows:
FocusFreeUp = True;         //slider always gets Up event.
FocusFreeDown = True;       //slider always gets Down event.
EditFreeRight = False;      //if edit mode, increase value.
EditFreeLeft = False;       //if edit mode, decrease value.
EditFreeUp = True;          //indeterminate Up always increases value.
EditFreeDown = True;        //indeterminate Down always decreases
                            value.
EditFreeAdvance = False;    //if edit mode, increase value.
EditFreeDecline = False;    //if edit mode, decrease value.
(3) The virtual action button's properties are set as follows:
FocusFreeAction = True;     //button always gets Enter event.
```

An OEM, for example, may also selectively control the availability of a focus-free behavior model using overriding identifiers. In certain implementations, therefore, in order for focus-free behavior to be exhibited, the OEM must declare which focus-free events will be supported by the device and their prescribed interaction model.

For example, an AllowFocusFree<event(s)> option can be provided that indirectly determines whether focus-free behavior will be honored for a particular form. Here, an OEM must satisfy all focus-free requests within a form before any focus-free behavior will be exhibited.

Examples include:

(1) Focus-free granted:

ISV form requests:

FocusFreeRightLeft=True

FocusFreeUp/Down=True

OEM settings:

AllowFocusFreeRightLeft=True

AllowFocusFreeUpDown=True

Result=Fully focus-free operation will be exhibited on the form. No controls will display focus.

(2) Focus-free not granted:

ISV form requests:

FocusFreeRightLeft=True

FocusFreeUp/Down=True

OEM settings:

AllowFocusFreeRightLeft=True

AllowFocusFreeUpDown=False

Result=No focus-free operation will be exhibited on the form. All interactive controls will display focus, and will need to get focus in order to receive key events.

FIGS. **9**(*a–c*) each depict yet another exemplary behavior model. Here, the form can include "edit-free" behaviors. As illustrated, in each of FIGS. **9**(*a–c*), display **110** includes a form having a row of vertical slider controllable objects **428**. Here, because each of the controllable objects (**420**) responds to similar inputs (e.g., up/down), the edit-free behavior allows the user to simply place one of the controllable objects in focus and edit it without having to explicitly enter the object/form into an edit mode.

Thus, for example, in FIG. **9**(*a*) controllable object **420**(*a*) becomes editable (arrow line **442**) upon being placed in focus (box **440**). In FIG. **9**(*b*), controllable object **420**(*b*) becomes editable (arrow line **442**) upon being placed in focus (box **440**). Similarly, as shown in FIG. **9**(*c*), controllable object **420**(*c*) becomes editable (arrow line **442**) upon being placed in focus (box **440**).

As before, certain implementations support the OEM's ability to override program logic **108** with respect to forms that request edit-free behavior. Thus, for example, an AllowEditFree option can be implemented that determines whether the OEM will honor any controllable objects' EditFree<event>=True settings. If AllowEditFree is set to False, any control that would otherwise allow manipulation regardless of edit-mode would, nevertheless would need to be in edit mode.

By way of example, with such an AllowEditFree option set to False the side-by-side vertical sliders of FIGS. **6**(*a–c*) can be operatively configured as follows in an edit-free behavior model:

```
Both vertical sliders' edit-free properties can be set as follows:
EditFreeRight = False;      //if edit mode, increase value.
EditFreeLeft = False;       //if edit mode, decrease value.
EditFreeUp = True;          //indeterminate Up always increases value.
EditFreeDown = True;        //indeterminate Down always decreases
                            value.
EditFreeAdvance = False;    //if edit mode, increase value.
EditFreeDecline = False;    //if edit mode, decrease value.
Similarly, with an AllowEditFree option set to False, for a horizontal
slider, the edit-free properties can be set as follows:
EditFreeRight = True;       //indeterminate Right always increases value.
EditFreeLeft = True;        //indeterminate Left always decreases value.
EditFreeUp = True;          //indeterminate Up always increases value.
EditFreeDown = True;        //indeterminate Down always decreases
                            value.
EditFreeAdvance = True;     //inderterminate Advance always increases
                            value.
EditFreeDecline = True;     //indeterminate Decline always decreases
                            value.
```

Reference is now made to FIG. **10**, which depicts certain other exemplary types of controllable objects that may also be included in a form on display **110**. Here, an edit box object **460**, a spinner box object **462** and a scrollable list box object **464** are depicted. These and other GUI object and various forms, themes, and the like are well known.

A flow-chart is depicted in FIG. **11** for a method **500** for mapping user inputs to key events **104** (see FIG. **1**), in accordance with certain exemplary implementations. In step **502**, user inputs are received from at least one input mechanism **106**. In step **504**, the inputs are mapped to key events **104**. In step **506**, the inputs are processed according to the key events **104**.

Although some preferred implementations of various methods and arrangements have been illustrated in the accompanying Drawings and described in the foregoing Description, it will be understood that the invention is not limited to the exemplary implementations disclosed, but is capable of numerous rearrangements, modifications and substitutions as set forth and defined by the following claims.

What is claimed is:

1. A method for interfacing multiple different user input hardware arrangements with virtual object-based graphical user interface logic, the method comprising:

generating a displayable form within a graphical user interface, the displayable form including at least one controllable virtual user-input object;

establishing a set of key events, wherein at least a portion of the key events can be operatively associated with a plurality of different types of non-virtual user input mechanisms;

receiving user input via at least one non-virtual user input mechanism selected from the plurality of different types of non-virtual user input mechanisms;

establishing a behavior model for the displayable form; and

determining when an operational change associated with the controllable virtual user-input object is required based at least on the behavior model and the received user input and when appropriate causing the operational chance to occur such that the virtual user-input controllable object is graphically altered in appearance and associated controlled logic functionality is modified accordingly.

2. The method as recited in claim **1**, wherein the controllable virtual user-input object is only operatively controllable when in an edit mode.

3. The method as recited in claim **2**, wherein the controllable virtual user-input object is selectively placed in the edit mode via at least one of the key events.

4. The method as recited in claim **2**, wherein the controllable virtual user-input object is selectively placed in the edit mode via an override identifier.

5. The method as recited in claim **2**, wherein the controllable virtual user-input object is always in the edit mode.

6. The method as recited in claim **1**, wherein the controllable virtual user-input object is only operatively controllable when the controllable virtual user-input object is in a focus mode.

7. The method as recited in claim **6**, wherein the controllable virtual user-input object is selectively placed in the focus mode via at least one of the key events.

8. The method as recited in claim **6**, wherein the controllable virtual user-input object is always in the focus mode.

9. The method as recited in claim **1**, wherein the controllable virtual user-input object is programmable to selectively respond to each one of the key events.

10. The method as recited in claim **1**, wherein the set of key events includes a subset of key events that operate independent an operational mode associated with the displayable form, and the operational mode includes an edit mode and a non-edit mode.

11. The method as recited in claim **1**, wherein the set of key events includes a subset of key events that operate depending upon an operational mode associated with the displayable form, and the operational mode includes an edit mode and a non-edit mode.

12. The method as recited in claim **1**, wherein a plurality of controllable virtual user-input objects are provided within the displayable form and a focus on a particular one of the controllable virtual user-input objects is selectable via at least one corresponding focus event selected from the set of key events.

13. The method as recited in claim **12**, wherein, when placing the focus on the particular one of the controllable virtual user-input objects further allows the controllable virtual user-input object to be selectively placed in the edit mode via a corresponding edit event selected from the set of key events.

14. The method as recited in claim **13**, wherein the controllable virtual user-input object is automatically placed in the edit mode when the focus is on the particular one of the controllable virtual user-input objects.

15. The method as recited in claim **1**, wherein at least one of the set of key events is selected from a group of key events comprising: focus right, focus left, focus up, focus down, focus upper right, focus, lower left, focus, upper left, focus lower right, value right, value left, value up, value down, value increment, value decrement, enter edit, exit edit, focus next, focus previous, right, left, up, down, advance, decline, action, edit free right, edit free left, edit free up, edit free down, edit free advance, and edit free decline.

16. The method as recited in claim **1**, wherein the non-virtual user input mechanism is selected from a group of input mechanisms comprising: an electrical switch, a mechanical switch, an optical switch, a thermal switch, a transducer, a touch pad, a keypad, a button, a rotating knob, a push knob, a pull knob, a directional pad, a toggle switch, and a joystick.

17. The method as recited in claim **1**, wherein the controllable virtual user-input object is selected from a group of graphically displayable controllable virtual user-input objects comprising sliders, knobs, buttons, edit fields, spinners, and scrollable boxes.

18. A computer-readable medium having computer-executable instructions for performing steps comprising:

generating a displayable form within a graphical user interface, the displayable form including at least one controllable virtual user-input object;

establishing a set of key events, wherein at least a portion of the key events can be operatively associated with a plurality of different types of non-virtual user input mechanisms;

receiving user input via at least one non-virtual user input mechanism selected from the plurality of different types of non-virtual user input mechanisms;

establishing a behavior model for the displayable form; and

determining when an operational change associated with the controllable virtual user-input object is required based at least on the behavior model and the received user input and when appropriate causing the operational change to occur such that the virtual user-input controllable object is graphically altered in appearance and associated controlled logic functionality is modified accordingly.

19. The computer-readable medium as recited in claim **18**, wherein the controllable virtual user-input object is only operatively controllable when in an edit mode.

20. The computer-readable medium as recited in claim **19**, wherein the controllable virtual user-input object is selectively placed in the edit mode via at least one of the key events.

21. The computer-readable medium as recited in claim **19**, wherein the controllable virtual user-input object is selectively placed in the edit mode via an override identifier.

22. The computer-readable medium as recited in claim **19**, wherein the controllable virtual user-input object is always in the edit mode.

23. The computer-readable medium as recited in claim **18**, wherein the controllable virtual user-input object is only operatively controllable when the controllable virtual user-input object is in a focus mode.

24. The computer-readable medium as recited in claim **23**, wherein the controllable virtual user-input object is selectively placed in the focus mode via at least one of the key events.

25. The computer-readable medium as recited in claim **23**, wherein the controllable virtual user-input object is always in the focus mode.

26. The computer-readable medium as recited in claim **18**, wherein the controllable virtual user-input object is programmable to selectively respond to each one of the key events.

27. The computer-readable medium as recited in claim **18**, wherein the set of key events includes a subset of key events that operate independent an operational mode associated with the displayable form, and the operational mode includes an edit mode and a non-edit mode.

28. The computer-readable medium as recited in claim 18, wherein the set of key events includes a subset of key events that operate depending upon an operational mode associated with the displayable form, and the operational mode includes an edit mode and a non-edit mode.

29. The computer-readable medium as recited in claim 18, wherein a plurality of controllable virtual user-input objects are provided within the displayable form and a focus on a particular one of the controllable virtual user-input objects is selectable via at least one corresponding focus event selected from the set of key events.

30. The computer-readable medium as recited in claim 29, wherein, when placing the focus on the particular one of the controllable virtual user-input objects further allows the controllable virtual user-input object to be selectively placed in the edit mode via a corresponding edit event selected from the set of key events.

31. The computer-readable medium as recited in claim 30, wherein the controllable virtual user-input object is automatically placed in the edit mode when the focus is on the particular one of the controllable virtual user-input objects.

32. The computer-readable medium as recited in claim 18, wherein at least one of the set of key events is selected from a group of key events comprising: focus right, focus left, focus up, focus down, focus upper right, focus, lower left, focus, upper left, focus lower right, value right, value left, value up, value down, value increment, value decrement, enter edit, exit edit, focus next, focus previous, right, left, up, down, advance, decline, action, edit free right, edit free left, edit free up, edit free down, edit free advance, and edit free decline.

33. The computer-readable medium as recited in claim 18, wherein the controllable virtual user-input object is selected from a group of graphically displayable controllable virtual user-input objects comprising sliders, knobs, buttons, edit fields, spinners, and scrollable boxes.

34. An apparatus comprising:

at least one non-virtual user input mechanism;

a display; and

logic operatively coupled to the non-virtual user input mechanism and the display and configured to generate a displayable form within a graphical user interface on the display wherein the displayable form includes at least one controllable virtual user-input object, establish a set of key events, wherein at least a portion of the key events can be operatively associated with the one none virtual user input mechanism and at least one other different type of non-virtual user input mechanism, receive user input via the one non-virtual user input mechanism, establish a behavior model for the displayable form, determine when an operational change associated with the controllable virtual user-input object is required based at least on the behavior model and the received user input, and cause the operational change to occur such that the virtual user-input controllable object is graphically altered in appearance and associated controlled functionality of the apparatus is modified accordingly.

35. The apparatus as recited in claim 34, wherein the controllable virtual user-input object is only operatively controllable when in an edit mode.

36. The apparatus as recited in claim 34, wherein the logic selectively places the controllable virtual user-input object in the edit mode based on at least one corresponding edit event selected from the set of key events.

37. The apparatus as recited in claim 34, wherein the logic selectively places the controllable virtual user-input object in the edit mode based on a definable override identifier.

38. The apparatus as recited in claim 34, wherein the controllable virtual user-input object is always in the edit mode.

39. The apparatus as recited in claim 34, wherein at least one of the set of key events is selected from a group of key events comprising: focus right, focus left, focus up, focus down, focus upper right, focus, lower left, focus, upper left, focus lower right, value right, value left, value up, value down, value increment, value decrement, enter edit, exit edit, focus next, focus previous, right, left, up, down, advance, decline, action, edit free right, edit free left, edit free up, edit free down, edit free advance, and edit free decline.

40. The apparatus as recited in claim 34, wherein the one non-virtual user input mechanism is selected from a group of non-virtual user input mechanisms comprising: an electrical switch, a mechanical switch, an optical switch, a thermal switch, a touch pad, a keypad, a button, a rotating knob, a push knob, a pull knob, a directional pad, a toggle switch, and a joystick.

41. The apparatus as recited in claim 34, wherein the controllable virtual user-input object is selected from a group of graphically displayable controllable objects comprising sliders, knobs, buttons, edit fields, spinners, and scrollable boxes.

* * * * *

UNITED STATES PATENT AND TRADEMARK OFFICE

CERTIFICATE OF CORRECTION

PATENT NO. : 6,704,032 B1
DATED : March 09, 2004
INVENTOR(S) : Falcon et al.

It is certified that error appears in the above-identified patent and that said Letters Patent is hereby corrected as shown below:

Column 6,
Line 1, delete “is” between “422” and “can”.

Signed and Sealed this

Twenty-ninth Day of June, 2004

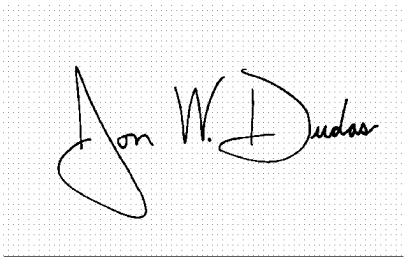

JON W. DUDAS
Acting Director of the United States Patent and Trademark Office